Tree Physiology 26, 1207–1215
© 2006 Heron Publishing—Victoria, Canada

Loblolly pine and slash pine responses to acute aluminum and acid exposures

JAROSLAW NOWAK[1] and ALEXANDER L. FRIEND[2,3]

[1] *School of Forest Resources and Conservation and North Florida Research and Education Center, Institute of Food and Agricultural Sciences (IFAS), University of Florida, 155 Research Road, Quincy, FL 32351-5677, USA*

[2] *North Central Research Station, USDA Forest Service, 410 MacInnes Drive, Houghton, MI 49931-1134, USA*

[3] *Corresponding author (afriend@fs.fed.us)*

Received September 22, 2005; accepted December 19, 2005; published online June 1, 2006

Summary In response to concerns about aluminum and HCl exposure associated with rocket motor testing and launches, survival and growth of full-sib families of loblolly pine (*Pinus taeda* L.) and slash pine (*Pinus elliottii* Engelm.) were evaluated in a nursery bed experiment. Each species was exposed to a single soil application of aluminum chloride (0.33 M $AlCl_3$, pH 2.5), hydrochloric acid (0.39 M HCl, pH 0.6) or water, with or without mycorrhizal inoculation with *Pisolithus tinctorius* (Coker and Couch). After 20 weeks without inoculation, survival in $AlCl_3$ and HCl treatments averaged 52% for loblolly pine and 72% for slash pine. Inoculation improved survival of loblolly pine, receiving HCl from 49 to 73%, and of those receiving $AlCl_3$, from 55 to 90%. Inoculation also resulted in improved survival and growth of individual families in $AlCl_3$, but not in HCl treatments. Results illustrate the relative resistance of both pine species to the acute treatments supplied, the improvement in resistance associated with mycorrhizal inoculation and the importance of field testing, following hydroponic screening, to verify the resistance to soil-supplied stresses.

Keywords: acute acidity exposure, aluminum resistance, aluminum tolerance, aluminum toxicity, genetic variation, mycorrhizae, Pinus elliottii, Pinus taeda, Pisolithus tinctorius, soil acidity, solid rocket motor testing.

Introduction

Aluminum (Al) toxicity is perceived as a potential threat to the integrity of forest ecosystems (Likens et al. 1996, Adams et al. 1999, Schier and McQuattie 2000, Kobe et al. 2002, Mikułowski et al. 2005). Acid atmospheric deposition associated with fossil fuel combustion is usually the focus of these concerns (e.g., Likens et al. 1996, Hodson and Sangster 1999, Lux and Cumming 1999, 2001, Fottová 2003). However, point sources may also have local relevance. Our study was prompted by environmental concerns over the proposed Advanced Solid Rocket Motor (ASRM) testing in southern Mississippi. Static testing of the ASRM generates about 165 Mg of particulate matter, primarily aluminum oxide (Al_2O_3) and 104 Mg of hydrogen chloride (HCl) during each test firing (NASA 1989). Besides nitrogen dioxide (NO_2) and nitric acid (HNO_3), HCl is the largest component of rocket engine emissions in the USA (NRC 1998) and is formed during the combustion of rocket propellants containing ammonium perchlorate (NH_4ClO_4). Acidity of the resulting precipitation is diluted rapidly with distance; however, pH ≤ 0.5 is commonly measured in exhaust HCl washout collected in the immediate vicinity of space shuttle launch sites (Anderson and Keller 1983), and pH ≤ 1.8 precipitation can occur as far as 50 km away under certain atmospheric conditions (Madsen 1981). In the case of the ASRM testing, the projected Al_2O_3 and HCl emissions are threefold higher than those present in a ground cloud at a single launch of currently operated space shuttles (NASA 1978). Exhaust Al_2O_3 serves as a carrier for HCl and provides droplet nucleation sites contributing to HCl condensation in the atmosphere. After reaching soil, Al_2O_3 is chemically inert, but significant input of HCl enhances soil Al mobility (Schmalzer et al. 1993) and may result in increased availability of Al to plants. Soil pH in the vicinity of the ASRM testing site ranges from 3.5 to 5.5, but is not expected to change rapidly in response to HCl deposition because of the high buffering capacity provided by the underlying clay horizons. However, plant responses to HCl raise potential concerns. A single application of pH 0.5 or 1.0 HCl solutions prevented seedling establishment of plants indigenous to a California launch site, while a treatment of pH 2.5 reduced seedling survival and yield (Zammit and Zelder 1988). Although the impact of chronically elevated concentrations of Al on trees has been widely studied (Thornton et al. 1987, 1989, Joslin and Wolfe 1988, 1989, Schaedle et al. 1989, Cumming and Weinstein 1990*a*, 1990*b*, Kelly et al. 1990, Schier and McQuattie 2000, 2002), the impact of large pulses of Al availability resulting from direct Al additions, or from mobilization of soil Al by low pH HCl inputs, have yet to be investigated in this context.

Apart from localized impacts of rocket launching or testing, high concentrations of soil Al may result from surface metal mining and smelting as well as accidental HCl release from in-

dustrial facilities. Open pit mining generates large quantities of acid drainage and smelting is a major contributor to acidic atmospheric deposition (Dudka and Adriano 1997), both of which have the potential to mobilize soil Al. Mine spoils often contain high concentrations of plant available Al, which impedes revegetation of mined areas (e.g., Gurung et al. 1996, Maddocks et al. 2004). Although the probability of accidental HCl release is relatively small, spills of up to 460 Mg of 32% HCl from storage tanks onto the ground have been reported (NRC 1998). Such events would undoubtedly kill or injure plants, if present, and mobilize locally large quantities of soil Al. The USA alone produces 3.8 Tg year^{-1} of HCl (EPA 2003*a*) and even without accidents, baseline HCl emissions total 2.3 Gg year^{-1} (EPA 2003*b*). Globally, low level exposure to HCl deposition also results from fossil fuel and waste burning, which together release 6.6 Tg year^{-1} of HCl into the atmosphere (McCulloch et al. 1999).

To assess the phytotoxicity associated with high concentrations of Al, Nowak and Friend (1995) conducted a hydroponic study and found substantial variation in Al resistance among full-sib families of loblolly pine (*Pinus taeda* L.) and slash pine (*Pinus elliottii* Engelm.), two tree species growing in the vicinity of proposed rocket motor tests in Mississippi. Exclusion of Al from root tips was determined to be a major Al resistance mechanism in these pine genotypes (Nowak and Friend 2005). However, the relevance of these results to field performance is questionable because of the large differences between the root environment in natural soil and in hydroponics. One of the main differences between the two types of culture is that mycorrhizae are absent from hydroponic systems. Mycorrhizae are known to confer Al resistance to pines. The benefit is achieved through improved P uptake (e.g., Schier and McQuattie 1996) or reduced Al uptake (e.g., Cumming and Weinstein 1990*b*), perhaps through chelation of Al by organic acids produced in greater quantities by mycorrhizal seedlings than by non-mycorrhizal seedlings (Ahonen-Jonnarth et al. 2000).

This study had two objectives: (1) evaluate field survival and growth responses of loblolly pine and slash pine to acute, soil-supplied Al or HCl stress, including the effects of mycorrhizal inoculation on resistance to either of these two stresses; and (2) compare loblolly pine and slash pine full-sib family survival and growth responses to elevated soil Al with previously documented Al-resistance of the same genetic groups grown in nutrient solutions (Nowak and Friend 1995).

Materials and methods

Plant material and treatments

Seeds of loblolly pine and slash pine, each of the same five full-sib families used previously in a solution culture Al screening study (LOB 1, 4, 5, 8, 10, and SLASH 12, 13, 14, 17, 18; Nowak and Friend 1995) were germinated and grown in 15-cm-long leach tubes containing a 1:1 (v/v) mix of peat moss and vermiculite. The overwintered, 14-month-old seedlings were transplanted to a nursery bed located at Harrison Experimental Forest (89.05° W, 30.63° N) near Saucier, MS, on May 18, 1993. The soil (fine-loamy, siliceous, thermic Typic Paleudult) had been previously sterilized with methyl bromide by fumigation. Seedlings were established at 10 × 10 cm spacing within 60 × 60 cm species plots. Half of all plots were inoculated with *Pisolithus tinctorius* Coker & Couch (PT-Marx superstrain; Mycorr Tech, Pittsburgh, PA) following the manufacturer's guidelines, while the remaining plots were left uninoculated.

After 10 weeks of seedling establishment, soil treatments were applied to each species plot. For the Al and HCl treatments, we applied 4.1 l of 0.33 M $AlCl_3$, pH 2.50, and 4.1 l of 0.39 M HCl, pH 0.58, respectively. The control treatments received 4.1 l of water. All soil treatments were applied evenly between rows of seedlings. Plots receiving different soil treatments were located 60 cm apart and separated by Plexiglas panels (inserted 30 cm into the ground before the seedlings were transplanted to the species plots) that defined each plot's boundary (Figure 1). Treatments were selected to mimic Al fallout from one ASRM test firing (NASA 1989) spread evenly over 85.5 ha and were comparable to previous hydroponic studies (Nowak and Friend 1995). To achieve a target Al value in the soil treatment comparable with that previously used in a hydroponic treatment (Nowak and Friend 1995), the nursery bed soil of each species plot was analyzed for Al based on saturated paste water extraction and atomic absorption spectrometric techniques (Barnhisel and Bertsch 1982).

Experimental design

The experimental design was a split-split-split-plot with families nested in species and three blocks inside a nursery bed

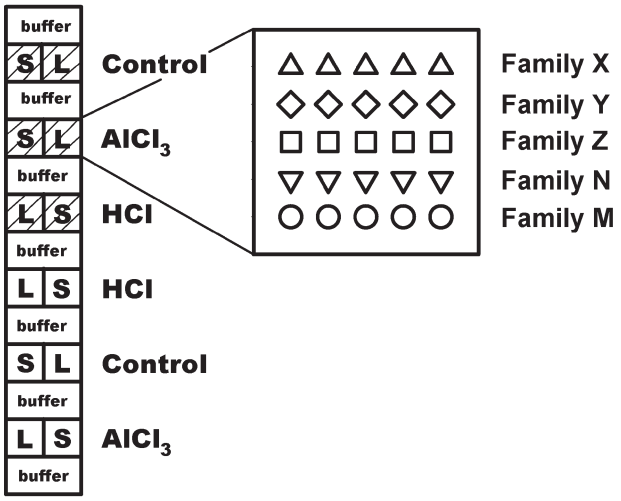

Figure 1. Nursery bed experiment block number one. Shading indicates areas of the experimental plots inoculated with mycorrhizal fungus, *Pisolithus tinctorius*, before seedlings were transplanted; $AlCl_3$, HCl and Control denotes soil treatment sub-plots; S = slash pine and L = loblolly pine and denote species sub-sub-plots. The insert depicts organization of a sub-sub-sub-plot with full-sib family rows denoted X, Y, Z, N and M. The experiment comprised three such blocks, with treatments randomly located within each, in a nursery bed.

(Figure 1). Blocking was along the nursery bed to account for any soil differences before application of the treatments. A randomization procedure was used to assign two inoculation treatments to plots, three soil treatments to sub-plots, two pine species to sub-sub-plots and five full-sib families of each pine species to sub-sub-sub-plots. Each full-sib family sub-sub-sub-plot consisted of a row of five seedlings.

Seedling analyses

Two weeks before applying the soil treatments and 3, 6, 10 and 20 weeks after soil treatment application, all seedlings were measured for ground-line diameter and height. Stem volumes were estimated assuming a cone shape ($1/3\ \pi r^2 h$). Seedlings were harvested in mid-December. Topsoil in the nursery bed was 30 cm deep and harvest was confined to this depth (most roots occurred between 0 and 25 cm depth). After harvest, seedling tops and roots were brought to the laboratory, thoroughly washed with tap water, and rinsed in distilled water. Needles, stems, fine roots (≤ 1 mm in diameter), medium roots (diameter >1 mm, but < 2 mm) and coarse roots (≥ 2 mm in diameter) were separated and oven dried at 70 °C to constant dry mass (DM).

After DM analyses, needles and fine roots of one seedling per family from each species plot were ground and analyzed for Al by atomic absorption spectrometry (IL553; Instrumentation Laboratory, Lexington, MA; Isaac and Kerber 1971). At the time of root separation, one randomly chosen lateral root (diameter ≤ 1 mm) of one seedling per family from each species plot was selected for mycorrhizal assessment. Root length was measured with a digital image analysis system (DIAS II, Decagon Devices Inc., Pullman, WA). Subsequently, the root was cut into ≈ 5-cm-long segments, placed in a petri dish, and the number of short mycorrhizal and short non-mycorrhizal roots counted on each segment under 10-fold magnification using a StereoZoom 7 microscope (Bausch-Lomb Inc., Rochester, NY). Six morphological types (morphotypes) of mycorrhizae were distinguished: (1) monopodial; (2) bifurcate; (3) tri-podial; (4) quadra-podial; (5) bone-shaped; and (6) multipodial or otherwise not conforming to the other categories (cf. Simmons and Kelly 1989).

Soil analyses

Three weeks after application of the soil treatments, two soil samples were collected from each species plot with a soil probe (inside diameter 20 mm). The samples were composited by depth (0–5 and 6–30 cm) and stored in plastic bags at 7 °C before transfer to the laboratory for analysis. The holes resulting from sampling were filled with sand. At the end of the experiment, before seedling harvest, eight soil samples were taken from each species plot—four on each of the two plot diagonals—and processed as described for the earlier samples. In the laboratory, all soil samples were air dried and sieved through a 1-mm sieve within 3 weeks after collection. Soil pH was measured in distilled deionized H_2O (5 g of soil in 10 ml of water). Another 10 g of each air-dried soil sample was shaken with 50 ml of 1 M KCl for 24 h, extracts were filtered through Whatman No. 42 ashless filter paper and Al measured by atomic absorption spectrometry (Barnhisel and Bertsch 1982). Soil P, Ca, Mg and K were measured by the Mississippi State University Soil Testing Laboratory after a two-stage (Lancaster) soil extraction procedure (Cox 2001). The Lancaster method retains a reasonably uniform P extraction from the Al-P soil fraction, whereas extraction of P from the Ca-P fraction depends on soil pH and $CaCO_3$ content and therefore, may better approximate plant available P. Extracted soil P was measured colorimetrically, and soil Ca, Mg and K were measured by inductively coupled plasma emission spectrometry. Soil organic matter was determined by colorimetric analysis (DeBolt 1974).

Statistical analyses

Treatment effects were analyzed by mixed linear models according to the mixed procedure in SAS v. 8e software (SAS; Cary, NC). In the overall model, inoculation treatments, soil treatments, species and their interactive terms were treated as fixed effects, and block and family nested in species and their interactive terms were treated as random effects. Treatment effects within inoculation treatments were similarly analyzed. When testing for treatment effects within species, family was treated as a fixed effect in a split-split-plot model. To test for inoculation effects at a single family level, inoculation was the only fixed effect and block the only random effect specified in the statistical model. Soil properties were analyzed using a split-split-split-split-plot model. In these analyses, sampling depth was the sub-sub-sub-plot, and standard split-in-time techniques were used to test for sampling time in addition to sampling depth effects. The Satterthwaite method for calculating degrees of freedom was specified for all models. Reported are least squares means estimates (LSMEs), which are more robust representations of true population means (Littell et al. 1996), and P values from Type 3 tests of fixed effects. For significant ($P \leq 0.05$) treatment or interactive effects, multiple LSMEs were separated by constructing two-dimensional matrices listing Tukey adjusted P values for all appropriate pairwise LSME comparisons. Percent family survival in each sub-sub-sub-plot was arcsine transformed before statistical analyses and then back transformed for reporting. To further stabilize the variance, $25/n$ (where $n = 5$) was substituted for 0% and $100 - 25/n$ for 100% survival rates (Steel and Torrie 1980) before arcsine transformation.

Normalized growth indices were calculated and ranked to compare full-sib family Al-resistance between soil (this study) and solution (Nowak and Friend 1995) cultures, irrespective of inherent family growth differences and seedling age differences between the studies. For this study, the indices were defined as: $G_{soil} = S/F$, where G_{soil} = growth in the $AlCl_3$ (inoculated or non-inoculated) or HCl (inoculated or non-inoculated) treatments relative to that in the non-inoculated control treatments; S = individual value of the growth variable measured in the $AlCl_3$ (inoculated or non-inoculated) or HCl (inoculated or non-inoculated) treatments; and F = mean value of the growth variable measured in the non-inoculated control treatments.

For the nutrient solution study, the indices were recalculated in similar fashion using the original data. To allow rank assignment, family growth indices for whole-seedling, needle, stem and fine root DM, and stem volume were averaged for seedlings in each of the $AlCl_3$ and HCl, inoculated and non-inoculated treatments, and the ranks for each soil treatment were compared with the ranks for the same growth variables obtained for the same families in the high-Al nutrient solutions (Nowak and Friend 1995) by Spearman's coefficient of rank correlation (Steel and Torrie 1980). The five seedling growth variables and four soil × inoculation treatment combinations for each of the species resulted in 40 coefficient of rank correlation comparisons between the soil and solution cultures.

Results

Seedling survival

Seedling mortality was observed within days after application of $AlCl_3$ or HCl to the soil. Loblolly pine mortality tapered off in 6 weeks and that of slash pine, in 10 weeks following application of $AlCl_3$ or HCl to the soil. Inoculation treatments interacted with species ($P = 0.03$) such that survival was higher only in inoculated (87%) than in non-inoculated (70%) loblolly pine ($P = 0.01$), whereas inoculation had no effect on slash pine survival (≈ 80% in both inoculated and non-inoculated seedlings). Within inoculated treatments, survival across species was higher in control seedlings (94%) than in HCl-treated seedlings (72%; $P = 0.03$), whereas survival in the $AlCl_3$-treated seedlings (86%) did not differ significantly from survival in the control and HCl-treated seedlings. In the non-inoculated treatments, there was a soil treatment × species treatment interaction ($P = 0.03$) manifested as higher survival for slash pine (76%) than for loblolly pine (49%; $P = 0.03$) in the HCl-treated plots, whereas the $AlCl_3$ treatment did not significantly affect species survival ($AlCl_3$: loblolly 55% versus slash 68%; control: loblolly 95% versus slash 94%). Within species, inoculation improved loblolly pine survival from 55–90% for $AlCl_3$-treated seedlings and from 49–73% for HCl-treated seedlings, whereas inoculation had no significant effect on survival of control seedlings, which was approximately 95% for inoculated and non-inoculated seedlings (Table 1). Across all treatments, survival was higher for LOB 8 (87%) than for LOB 4 (70%; $P = 0.02$). Inoculation improved survival of LOB 1 (from 61–91%) and LOB 4 (from 33–86%) in the $AlCl_3$ treatments ($P \leq 0.03$). Slash pine survival was higher in control seedlings (94%) than in the $AlCl_3$-treated seedlings (75%) or HCl-treated seedlings (74%; $P \leq 0.01$), but was unaffected by mycorrhizal inoculation (Table 1).

Mycorrhizal status of roots

Inoculation had no effect on mycorrhizae counts or frequency of morphotypes; however, we observed aboveground fruiting bodies, fungal mantles covering short roots and extensive extramatrical hyphae in soil at the time of seedling excavation in the inoculated treatments, but not in the non-inoculated treatments. We detected 45 (loblolly pine) and 27 (slash pine) short mycorrhizal roots per m of lateral root length (species effect $P = 0.07$). No other treatment effects were observed. On average, 39% of loblolly pine and 36% of slash pine short roots were mycorrhizal ($P = 0.49$).

Table 1. Survival of loblolly pine and slash pine seedlings at the end of the experiment (values were back transformed following arcsine transformation for statistical analyses). Reported are least squares means estimates (LSMEs) for inoculation × soil treatment interactive terms 142 days after soils were treated with $AlCl_3$ (0.33 M, pH 2.5), HCl (0.39 M, pH 0.6) or water (control) solutions. Half of all plots were inoculated (Inoc) with the mycorrhizal fungus, *Pisolithus tinctorius*, before seedlings were transplanted to the nursery bed and the other half were not (NonI). Multiple LSMEs were separated by constructing two-dimensional matrices, listing Tukey adjusted P values for all appropriate pairwise LSME comparisons. For each species, LSME values followed by the same letter(s) are not significantly different at $P \leq 0.05$.

	NonI (%)	Inoc (%)
Loblolly pine		
$AlCl_3$	55 cd	90 ab
HCl	49 d	73 bc
Control	95 a	94 a
Slash pine		
$AlCl_3$	68 b	81 ab
HCl	76 ab	72 ab
Control	94 a	94 a

Seedling growth

At the end of the experiment, there were significant differences between species for whole-seedling, needle and stem DM in the $AlCl_3$ and HCl treatments, but not in the control treatments (Table 2). Biomass components were less for loblolly pine than for slash pine in both acute soil treatments, and loblolly pine needle DM was less in $AlCl_3$-treated seedlings than in control seedlings. Fine root DM did not differ between species and was unaffected by the soil treatments (Table 2). Inoculation had a positive effect on growth of some loblolly pine families in the $AlCl_3$ treatment, but not in the HCl or control treatments. In particular, in the $AlCl_3$ treatments, whole-seedling, needle and stem DM, as well as stem volume of LOB 1 and LOB 8, were 1.5- to 2.9-fold larger in inoculated seedlings than in non-inoculated seedlings ($P \leq 0.04$). Similarly, inoculation increased stem volume of LOB 10 from 2.96 to 5.12 cm^3 in $AlCl_3$-treated seedlings ($P = 0.03$). In contrast, in HCl-treated seedlings, inoculation decreased LOB 8 whole-seedling DM by 37% and in control seedlings inoculation, decreased all measured biomass components (except for fine root DM) by 50% within the same loblolly pine family ($P \leq 0.02$).

Inoculation affected individual slash pine family growth in the $AlCl_3$ and control treatments. SLASH 18 biomass components (except fine roots) and stem volume (6.89 versus 3.17 cm^3) were twofold larger in inoculated $AlCl_3$-treated

Table 2. Loblolly pine and slash pine seedling dry mass by tissue type at the end of the experiment. Reported are least squares means estimates (LSMEs) for soil treatment × species interactive terms 142 days after soils were treated with $AlCl_3$ (0.33 M, pH 2.5), HCl (0.39 M, pH 0.6) or water (control) solutions. Multiple LSMEs were separated by constructing two-dimensional matrices, listing Tukey adjusted *P* values for all appropriate pairwise LSME comparisons. For each tissue type, LSME values followed by the same letter(s) are not significantly different at $P \leq 0.05$.

	Loblolly pine	Slash pine
Whole-seedling dry mass (g)		
$AlCl_3$	8.86 c	14.64 ab
HCl	11.66 bc	16.77 a
Control	12.71 abc	13.77 abc
Needle dry mass (g)		
$AlCl_3$	3.30 c	6.19 ab
HCl	4.53 bc	7.03 a
Control	5.62 ab	6.53 ab
Stem dry mass (g)		
$AlCl_3$	2.31 c	4.25 ab
HCl	3.14 bc	4.95 a
Control	3.74 abc	4.11 abc
Fine root dry mass (g)		
$AlCl_3$	0.87 a	0.87 a
HCl	0.90 a	0.90 a
Control	0.81 a	0.78 a

seedlings than in non-inoculated $AlCl_3$-treated seedlings ($P \leq 0.02$). Inoculation had negative effects on all biomass components (except fine roots) and stem volume of control seedlings of SLASH 13 ($P \leq 0.02$).

Family Al-resistance rank correlations

We found significant family Al-resistance rank correlations between soil and solution cultures in only four out of 40 comparisons—two instances per species. For loblolly pine, ranks based on stem DM and stem volume from the inoculated $AlCl_3$ treatments were correlated ($r = 0.90$, $P = 0.04$, in both cases) with ranks obtained for the same families grown in 4.4 mM $AlCl_3$ nutrient solutions (Nowak and Friend 1995). In slash pine, ranks based on stem volume from the non-inoculated HCl treatments ($r = 0.90$, $P = 0.04$), and those based on fine root DM from the inoculated HCl treatments ($r = 1.00$, $P = 0.008$) were correlated with ranks obtained in the nutrient solution cultures.

Needle and root Al concentrations

Needle Al concentrations depended on soil treatment × species treatment interaction ($P = 0.05$). The highest needle Al concentrations (0.893 g kg_{DM}^{-1}) were found in loblolly pine seedlings grown in the $AlCl_3$ treatment and the lowest needle Al concentrations (0.545 g kg_{DM}^{-1}) were in slash pine seedlings in the HCl treatment ($P = 0.007$). In the HCl treatments, needles of loblolly pine seedlings accumulated more Al (0.832 g kg_{DM}^{-1}) than needles of slash pine seedlings ($P = 0.006$). Needles of control seedlings of loblolly pine (0.652 g kg_{DM}^{-1}) and slash pine (0.578 g kg_{DM}^{-1}) accumulated less Al than needles of $AlCl_3$-treated loblolly pine ($P \leq 0.05$). The mean needle Al concentrations for soil × species treatment combinations were negatively correlated with the corresponding LSMEs for whole-seedling DM and all measured aboveground seedling growth variables including stem volume. In these comparisons, higher growth was associated with lower needle Al concentrations ($0.96 \geq |r| \geq 0.88$, $0.0025 < P < 0.009$). Within species, LOB 8 accumulated less needle Al (0.684 g kg_{DM}^{-1}) than either LOB 1 (0.869 g kg_{DM}^{-1}) or LOB 10 (0.860 g kg_{DM}^{-1}; $P \leq 0.005$). Inoculated slash pine seedlings had lower needle Al concentrations (0.529 g kg_{DM}^{-1}) than their non-inoculated counterparts (0.685 g kg_{DM}^{-1}; $P = 0.01$). Similarly, in the $AlCl_3$ treatments, LOB 10 inoculated seedlings had lower needle Al concentrations (0.755 g kg_{DM}^{-1}) than non-inoculated seedlings (1.190 g kg_{DM}^{-1}; $P = 0.05$). At the end of the experiment, fine root Al concentration was not significantly affected by the inoculation, $AlCl_3$, HCl or species treatments, and averaged 3.640 g kg_{DM}^{-1} across all treatments.

Soil properties

Soil exchangeable Al depended on inoculation treatment × soil treatment × sampling depth interaction ($P = 0.02$). The highest soil exchangeable Al was in the non-inoculated $AlCl_3$-treated plots in the top 5 cm of soil and the lowest in the inoculated control treatments in the same soil layer (Table 3). The amount of soil Al in the HCl treatments at 0–5 cm was half of that in the non-inoculated $AlCl_3$-treated plots at the same sampling depth, and higher than in the control plots for both inoculation treatments. In the $AlCl_3$ treatments, soil exchangeable Al in the top 5 cm of soil was higher in the non-inoculated plots than in the inoculated plots, and higher than in

Table 3. Soil exchangeable Al at the end of the experiment, 142 days after soil treatments. Reported are inoculation treatment × soil treatment × soil depth least squares means estimates (LSMEs) for plots inoculated (Inoc) or not inoculated (NonI) with the mycorrhizal fungus, *Pisolithus tinctorius*, treated with $AlCl_3$ (0.33, pH 2.5), HCl (0.39 M, pH 0.6) or water (control) solutions, for samples collected from 0–5 or 6–30 cm depth. Multiple LSMEs were separated by constructing two-dimensional matrices, listing Tukey adjusted *P* values for all appropriate pairwise LSME comparisons. Values of LSME followed by the same letter(s) are not significantly different at $P \leq 0.05$.

Soil treatment	Soil depth	Soil exchangeable Al ($cmol_c\ kg^{-1}$)	
	(cm)	NonI	Inoc
$AlCl_3$	0–5	1.06 a	0.39 bcd
	6–30	0.45 bc	0.15 bcd
HCl	0–5	0.53 b	0.49 b
	6–30	0.33 bcd	0.18 bcd
Control	0–5	0.09 cd	0.04 d
	6–30	0.19 bcd	0.08 cd

the 6–30 cm soil layer. In all other treatment combinations, soil exchangeable Al did not differ significantly between the top 5 cm and 6–30 cm soil layers.

Soil pH reflected a soil treatment × sampling depth × sampling time interaction ($P = 0.003$). The lowest measured soil pH was in the top 5 cm of $AlCl_3$-treated soil three weeks after the start of the soil treatments and the highest was in the control soil at the end of the experiment (Table 4). Soil pH increased between the two sampling times for all soil treatment × sampling depth combinations, except for the top 5 cm soil layer in the control treatments. Three weeks after the start of the soil treatments, soil pH was lower in the top 5 cm than in the 6 to 30 cm soil layer in the $AlCl_3$- and HCl-treated soils. Soil phosphorus (P), calcium (Ca), magnesium (Mg) and potassium (K) were variously affected by soil treatments, sampling depth and sampling time (Table 4).

Table 4. Soil pH_{H2O}, P, Ca, Mg and K three weeks after soil treatments and at the end of the experiment. Reported are soil treatment × soil depth × sampling time least squares means estimates (LSMEs) for soils treated with $AlCl_3$ (0.33 M, pH 2.5), HCl (0.39 M, pH 0.6), or water (control) solutions, collected from 0–5 or 6–30 cm depth, 22 or 142 days after soil treatments. Multiple LSMEs were separated by constructing two-dimensional matrices, listing Tukey adjusted P values for all appropriate pairwise LSME comparisons. For soil pH_{H2O} and each element, LSME values followed by the same letter(s) are not significantly different at $P \leq 0.05$.

Soil treatment	Soil depth (cm)	Sampling time after soil treatments	
		22 days	142 days
		Soil pH_{H2O}	
$AlCl_3$	0–5	4.35 h	4.93 de
	6–30	4.69 fg	5.02 cde
HCl	0–5	4.57 gh	5.01 cde
	6–30	4.81 ef	5.09 cd
Control	0–5	5.38 ab	5.46 a
	6–30	5.23 bc	5.43 a
		Soil P (mg kg^{-1})	
$AlCl_3$	0–5	30.0 a	30.1 a
	6–30	13.9 cd	10.7 d
HCl	0–5	32.9 a	26.0 ab
	6–30	15.0 bcd	12.8 cd
Control	0–5	22.0 abcd	24.6 abc
	6–30	13.5 cd	12.2 d
		Soil Ca ($cmol_c$ kg^{-1})	
$AlCl_3$	0–5	1.63 cde	0.78 f
	6–30	2.20 ab	1.42 de
HCl	0–5	1.66 bcd	1.05 ef
	6–30	2.08 abc	1.54 de
Control	0–5	2.52 a	2.19 abc
	6–30	2.29 ab	1.90 bcd
		Soil Mg ($cmol_c$ kg^{-1})	
$AlCl_3$	0–5	0.26 cde	0.12 f
	6–30	0.35 abc	0.22 def
HCl	0–5	0.23 cdef	0.14 ef
	6–30	0.32 bcd	0.25 cde
Control	0–5	0.46 a	0.39 ab
	6–30	0.34 bcd	0.26 cde
		Soil K ($cmol_c$ kg^{-1})	
$AlCl_3$	0–5	0.16 abc	0.10 e
	6–30	0.17 ab	0.12 de
HCl	0–5	0.15 bcd	0.11 e
	6–30	0.15 abc	0.11 e
Control	0–5	0.18 a	0.15 abc
	6–30	0.13 cde	0.10 e

Discussion

Pine responses to acute exposure to Al or HCl

Acute exposure to Al or HCl in the soil caused mortality of loblolly pine and slash pine within days after the treatments commenced. At the end of the experiment, the species did not differ in overall survival rates. However, loblolly pine survival was improved by inoculation with the mycorrhizal fungus, *P. tinctorius*, whereas slash pine survival was not. The ability of a plant to survive acute stress is important for its long-term persistence. Schmalzer et al. (1993) observed progressive mortality of vegetation (shrubs and small trees were eliminated more rapidly than forbs and graminoids) in the near-field impact areas associated with space shuttle launches, followed by considerable regrowth in the period without launches at the Kennedy Space Center in Florida. Severe vegetation damage resulting from space shuttle launches was restricted to about 87 ha (Duncan and Schmalzer 1994), which is similar to the area we assumed might be impacted by Al and HCl deposition from ASRM testing.

Based on the growth responses of surviving seedlings in our 142-day experiment, slash pine was more resistant than loblolly pine to stresses resulting from severe Al or HCl exposure. Root growth inhibition is widely used as a measure of Al toxicity in plants, but in our study, fine root DM did not differ in either of the species × soil treatment combinations, possibly because soil pH increased during the study (Table 4). It is generally accepted that root Al toxicity diminishes with increasing soil pH (e.g., Nietfeld 2001).

Although inoculation improved loblolly pine survival in the $AlCl_3$ and HCl treatments and growth of some families of both species in the $AlCl_3$ treatments, we did not detect inoculation effects on mycorrhizae counts or frequency of morphotypes. The fungal fruiting bodies, root mantles and hyphae observed in the inoculated, but not in the non-inoculated treatments at the time of seedling excavation, were consistent with the characteristics of *P. tinctorius* mycorrhizae (Anderson and Cordell 1980). However, it is likely that roots in the non-inoculated treatments were also inoculated with airborne spores of fungi from outside the plot, which could account for the lack of differences in mycorrhizal counts. Nevertheless, inoculation with *P. tinctorius* appeared to alter the functioning of the mycorrhizal symbiosis as indicated by the soil and plant effects. As we found, ectomycorrhizal fungi often confer Al resistance to host plants by reducing metal availability in the soil (Table 3) by unknown mechanisms (Baldwin et al. 2005). One possibility is external Al detoxification by organic acid ligands exuded

into the rhizosphere by mycorrhizal fungi in response to Al exposure (Ahonen-Jonnarth et al. 2000, Cumming et al. 2001, Baldwin et al. 2005). Soil Al bound by such ligands would be unavailable for plant uptake, which might account for our finding that inoculated slash pine seedlings had lower needle Al concentrations than non-inoculated seedlings ($P = 0.01$).

Al resistance in soil versus hydroponic culture

Species and family Al-resistance rankings in soil cultures in the current study were largely inconsistent with our earlier characterization of the same genetic material in hydroponic culture. In this soil study, slash pine was more resistant to Al than loblolly pine based on growth responses, whereas we previously characterized slash pine as being more sensitive to Al than loblolly pine based on shoot growth responses in nutrient cultures containing 4.4 mM Al (Nowak and Friend 1995). Family survival rates and growth also largely contradicted our previous characterization of Al resistance of full-sib loblolly pine and slash pine families. For example, we found greater overall survival of LOB 8 than LOB 4 ($P = 0.02$) seedlings, whereas previously we identified these families as Al-sensitive and Al-resistant, respectively. Based on growth responses, we found only four instances (two for each species, or 10%) out of 40 tested cases of significant family Al-resistance rank correlation between the soil and solution culture studies. Inconsistencies in Al toxicity effects between soil- and solution-grown plants are well known and depend on an array of differences between the growth media (Pavan and Bingham 1982, Pavan et al. 1982, Nietfeld 2001). Our results illustrate the danger of inferring field Al resistance from hydroponic testing alone, and underscore the importance of field testing to verify Al resistance of plant material previously screened in hydroponics.

Al resistance and exclusion of Al from shoots

Our data suggest that Al exclusion from shoots, perhaps by root processes, accounted for the differential Al resistance of the loblolly pine and slash pine genotypes we studied. We found negative correlations between needle Al accumulation and average loblolly pine and slash pine growth variables ($0.96 \geq |r| \geq 0.88$, $0.0025 < P < 0.009$). We reported similar correlations between needle Al concentrations and whole-seedling DM for the same slash pine families grown in hydroponics with 4.4 mM Al (Nowak and Friend 1995). Other researchers have also reported negative correlations between needle Al concentrations and growth of various shoot or root components in coniferous seedlings exposed to Al in soil media (Ohno et al. 1988, Wilkins and Hodson 1989) or in solution cultures (Geburek and Scholz 1989). Our previous results from solution culture studies (Nowak and Friend 1995, 2005) and the current soil study suggest that slash pine restricts Al movement from roots or soil to foliage more than loblolly pine. This suggestion is also supported by the study of Humphreys and Truman (1964) who found much higher foliar Al in loblolly pine (1.30 g kg_{DM}^{-1}) than in slash pine (0.69 g kg_{DM}^{-1}) trees grown on acid soils in eastern Australia where, as in our $AlCl_3$ and HCl treatments, Al^{3+} was a major soil exchangeable cation. Mycorrhizae could also play a role in shoot Al exclusion because needle Al concentrations were lower in inoculated slash pine than in non-inoculated slash pine and lower in inoculated than in non-inoculated $AlCl_3$-treated LOB 10 seedlings.

We have demonstrated that loblolly pine and slash pine are highly resistant to acute exposures to Al and HCl, and that mycorrhizal inoculation can improve seedling survival and subsequent growth in the presence of an elevated soil Al concentration. However, species and full-sib families within species differed in the survival and growth benefits derived from inoculation with *P. tinctorius* in the various soil treatments, suggesting that plant–fungus compatibility, or other factors, are important in mycorrhizae-mediated stress amelioration. Besides sites associated with rocket engine testing and rocket launching, our results may be applicable to revegetation of areas altered by metal mining (Gurung et al. 1996, Maddocks et al. 2004), metal smelting (Dudka and Adriano 1997) and any other areas where soil Al available to plants is unusually high (Giddens et al. 1997).

In conclusion, slash pine was more resistant than loblolly pine to acute Al exposure as indicated by growth responses, and more resistant to acute HCl exposure based on survival and growth responses. Inoculation with the mycorrhizal fungus, *P. tinctorius*, increased loblolly pine survival in the Al and HCl treatments and improved growth of selected families of both species exposed to Al. The mechanism of mycorrhizal benefit was not identified, but likely involved lowering of plant available Al in the soil, perhaps by increased organic acid excretion. The growth-based Al-resistance ranking based on field tests were similar in only 10% of tested cases to the ranking obtained for the same full-sib families in a hydroponic study. The primary Al-resistance mechanism in these pine species appears to be Al exclusion at the root or rhizosphere level.

Acknowledgments

Financial support for this study was provided by the National Aeronautics and Space Administration (NASA) Stennis Space Center under NASA Contract NAS13-330, and by the Mississippi Agricultural and Forestry Experiment Station, Stress Physiology Project MIS-0601. We are grateful to Mr. John Hendrickson of Scott Paper Co. for providing seeds and technical support. Special thanks to Mrs. Juanita A. Mobley and Mr. Douglas A. Crawford for assistance with chemical analyses. The assistance and support of Drs. William G. Cibula, Gregory A. Carter of NASA Stennis Space Center and John D. Hodges of Mississippi State University is gratefully acknowledged. We thank Dr. Cheryl L. Mackowiak whose comments and suggestions helped greatly to improve the original manuscript. We are especially grateful to Dr. Ramon C. Littell for his advice on statistical analyses. This paper appears as Journal Series Paper No. R-10226 of the Florida Agricultural Experiment Station.

References

Adams, J.F., C.W. Wood and R.I. Mitchell. 1999. Loblolly pine plant community structure and soil solution aluminum, organic acids, calcium, magnesium, and pH. Comm. Soil Sci. Plant Anal. 30: 1939–1950.

Anderson, R.L. and C.E. Cordell. 1980. How to recognize and quantify ectomycorrhizae on conifers. US Dept. For. Serv., Southeastern Area, State and Private Forestry. For. Bull. SA-FB/P8, 10 p.

Anderson, B.J. and V.W. Keller. 1983. Space shuttle exhaust cloud properties. NASA Tech. Pap. 2258. Marshall Space Flight Center, AL, 116 p.

Ahonen-Jonnarth, U., P.A.W. Van Hees, U.S. Lundstrom and R.D. Finlay. 2000. Organic acids produced by mycorrhizal *Pinus sylvestris* exposed to elevated aluminum and heavy metal concentrations. New Phytol. 146:557–567.

Baldwin, C., J. Cumming and A.T. Timperman. 2005. Isolation of naturally occurring aluminum ligands using immobilized metal affinity chromatography for analysis by ESI-MS. Analyst 130: 318–324.

Barnhisel, R. and P.M. Bertsch. 1982. Aluminum. *In* Methods of Soil Analysis. Part 2. Chemical and Microbiological Properties. 2nd Edn. Ed. A.L. Page. ASA-SSSA, Madison, pp 275–300.

Cox, M.S. 2001. The Lancaster soil test method as an alternative to the Mehlich 3 soil test method. Soil Sci. 166:484–489.

Cumming, J.R. and L.H. Weinstein. 1990*a*. Nitrogen source effects on Al toxicity in nonmycorrhizal and mycorrhizal pitch pine (*Pinus rigida*) seedlings. I. Growth and nutrition. Can. J. Bot. 68: 2644–2652.

Cumming, J.R. and L.H. Weinstein. 1990*b*. Aluminum-mycorrhizal interactions in the physiology of pitch pine seedlings. Plant Soil 125:7–18.

Cumming, J.R., T.D. Swiger, B.S. Kurnik and D.G. Panaccione. 2001. Organic acid exudation by *Laccaria bicolor* and *Pisolithus tinctorius* exposed to aluminum in vitro. Can. J. For. Res. 31: 703–710.

DeBolt, D.C. 1974. A high sample volume procedure for the colorimetric determination of soil organic matter. Comm. Soil Sci. Plant Anal. 5:131–137.

Dudka, S. and D.C. Adriano. 1997. Environmental impacts of metal ore mining and processing: a review. J. Env. Qual. 26:590–602.

Duncan, B.W. and P.A. Schmalzer. 1994. Using a geographical information system for monitoring space shuttle launches: determining cumulative distribution of deposition and an empirical test of a spatial model. Environ. Manage. 18:465–474.

EPA. 2003*a*. Economic impact analysis of the hydrochloric acid (HCl) production NESHAP. Final Report by U.S. Office of Air Quality Planning and Standards, EPA 453/R-03-001, Research Triangle Park, NC, February 2003, 15 p.

EPA. 2003*b*. National emission standards for hazardous air pollutants: hydrochloric acid production; final rule. Fed. Reg. 68: 19076–19103.

Fottová, D. 2003. Trends in sulphur and nitrogen deposition fluxes in the Geomon Network, Czech Republic, between 1994 and 2000. Water Air Soil Pollut. 150:73–87.

Geburek, T. and F. Scholz. 1989. Response of *Picea abies* (L.) Karst. provenances to aluminum in hydroponics. *In* Genetic Effects of Air Pollutants in Forest Tree Populations. Eds. F. Scholz, H.-R. Gregorius and D. Rudin. Springer-Verlag, Berlin, pp 55–65.

Giddens, K.M., R.L. Parfitt and H.J. Percival. 1997. Comparison of some soil properties under *Pinus radiata* and improved pasture. N.Z. J. Agric. Res. 40:409–416.

Gurung, S.R., R.B. Steward, P. Loganathan and P.E.H. Gregg. 1996. Aluminum–organic matter–fluoride interactions during soil development in oxidized mine waste. Soil Technol. 9:273–279.

Hodson, M.J. and A.G. Sangster. 1999. Aluminum/silicon interactions in conifers. J. Inorg. Biochem. 76:89–98.

Humphreys, F. and R. Truman. 1964. Aluminum and the phosphorus requirements of *Pinus radiata*. Plant Soil 20:131–134.

Isaac, R.A. and J.D. Kerber. 1971. Atomic absorption and flame photometry: techniques and uses in soil, plant, and water analysis. *In* Instrumental Methods for Analysis of Soils and Plant Tissue. Ed. L.M. Walsh. SSSA, Madison, pp 17–37.

Joslin, J.D. and M.H. Wolfe. 1988. Responses of red spruce seedlings to changes in soil aluminum in six amended forest soil horizons. Can. J. For. Res. 18:1614–1623.

Joslin, J.D. and M.H. Wolfe. 1989. Aluminum effects on northern red oak seedling growth in six forest soil horizons. Soil Sci. Soc. Am. J. 53:274–281.

Kelly, J.M., M. Schaedle, F.C. Thornton and J.D. Joslin. 1990. Sensitivity of tree seedlings to aluminum. II. Red oak, sugar maple, and European beech. J. Environ. Qual. 19:172–179.

Kobe, R.K., G.E. Likens and C. Eagar. 2002. Tree seedling growth and mortality responses to manipulations of calcium and aluminum in a northern hardwood forest. Can. J. For. Res. 32:954–966.

Likens, G.E., C.T. Driscoll and D.C. Buso. 1996. Long-term effects of acid rain: response and recovery of a forest ecosystem. Science 272:244–246.

Littell, R.C., G.A. Milliken, W.W. Stroup and R.D. Wolfinger. 1996. SAS System for mixed models. SAS Institute Inc., Cary, NC, 633 p.

Lux, H.B. and J.R. Cumming. 1999. Effect of aluminum on the growth and nutrition of tulip-poplar seedlings. Can. J. For. Res. 29:2003–2007.

Lux, H.B. and J.R. Cumming. 2001. Mycorrhizae confer aluminum resistance to tulip-poplar seedlings. Can. J. For. Res. 31:694–702.

Maddocks, G., C. Lin and D. McConchie. 2004. Effects of Bauxsol and biosolids on soil conditions of acid-generating mine spoil for plant growth. Environ. Pollut. 127:157–167.

Madsen, B.C. 1981. Acid rain at Kennedy Space Center, Florida: recent observations. Atmosph. Environ. 15:853–862.

McCulloch, A., M.L. Aucott, C.M. Benkovitz, T.E. Graedel, G. Kleiman, P.M. Midgley and Y.-F. Li. 1999. Global emissions of hydrogen chloride and chloromethane from coal combustion, incineration and industrial activities: reactive chlorine emissions inventory. J. Geophys. Res. 104:8391–9403.

Mikułowski, M., T. Zachara and I. Stupak Møller. 2005. Reclamation of forests degraded by air pollution in central and eastern Europe. *In* Restoration of Boreal and Temperate Forests. Eds. J.A. Stanturf and P. Madsen. CRC Press, Boca Raton, FL, pp 523–540.

NASA. 1978. Environmental impact statement space shuttle program (final). Washington, DC, 315 p.

NASA. 1989. Final environmental impact statement space shuttle advanced solid rocket motor program. John C. Stennis Space Center and George C. Marshall Flight Center, Washington, DC, 706 p.

Nietfeld, H.W.F. 2001. Modeling the dynamics of the rhizosphere aluminum chemistry in acid forest soils. *In* Trace Elements in the Rhizosphere. Eds. G.R. Gobran, W.W. Wenzel and E. Lombi. CRC Press, Boca Raton, FL, pp 253–308.

Nowak, J. and A.L. Friend. 1995. Aluminum sensitivity of loblolly pine and slash pine seedlings grown in solution culture. Tree Physiol. 15:605–609.

Nowak, J. and A.L. Friend. 2005. Aluminum fractions in root tips of slash pine and loblolly pine families differing in Al resistance. Tree Physiol. 25:245–250.

NRC. 1998. Assessment of exposure-response functions for rocket-emission toxicants. Subcommittee on Rocket-Emission Toxicants, Committee on Toxicology, Board on Environmental Studies and Toxicology, Commission on Life Sciences, National Research Council. National Academy Press, Washington, DC, 208 p (accessed online http://uf.aleph.fcla.edu/ on June 19, 2005).

Ohno, T., E.I. Sucoff, M.S. Erich, P.R. Bloom, C.A. Buschena and R.K. Dixon. 1988. Growth and nutrient content of red spruce seedlings in soil amended with aluminum. J. Environ. Qual. 17: 666–672.

Pavan, M.A. and F.T. Bingham. 1982. Toxicity of aluminum to coffee seedlings grown in nutrient solution. Soil Sci. Soc. Am. J. 46: 993–997.

Pavan, M.A., F.T. Bingham and P.F. Pratt. 1982. Toxicity of aluminum to coffee in Ultisols and Oxisols amended with $CaCO_3$, $MgCO_3$, and $CaSO_4$ $2H_2O$. Soil Sci. Soc. Am. J. 46:1201–1207.

Schaedle, M., F.C. Thornton, D.J. Raynal and H.B. Tepper. 1989. Response of tree seedlings to aluminum. Tree Physiol. 5:337–356.

Schier, G.A. and C.J. McQuattie. 1996. Response of ectomycorrhizal and nonmycorrhizal pitch pine (*Pinus rigida*) seedlings to nutrient supply and aluminum: growth and mineral nutrition. Can. J. For. Res. 26:2145–2152.

Schier, G.A. and C.J. McQuattie. 2000. Effect of water stress on aluminum toxicity in pitch pine seedlings. J. Plant Nutr. 23:637–647.

Schier, G.A. and C.J. McQuattie. 2002. Stimulatory effects of aluminum on growth of sugar maple seedlings. J. Plant Nutr. 25: 2583–2589.

Schmalzer, P.A., C.R. Hall, C.R. Hinkle, B.W. Duncan, W.M. Knott III and B.R. Summerfield. 1993. Environmental monitoring of space shuttle launches at Kennedy Space Center: the first ten years. Amer. Inst. Aeronautics Astronautics. Conf. Pap. AIAA93-0303, 16 p.

Simmons, G.L. and J.M. Kelly. 1989. Influence of O_3, rainfall acidity, and soil Mg status on growth and ectomycorrhizal colonization of loblolly pine roots. Water Air Soil Pollut. 44:159–171.

Steel, R.G.D. and J.H. Torrie. 1980. Principles and procedures of statistics. A biometrical approach. 2nd Edn. McGraw-Hill, NY, 633 p.

Thornton, F.C., M. Schaedle and D.J. Raynal. 1987. Effects of aluminum on red spruce seedlings in solution culture. Environ. Expt. Bot. 27:489–498.

Thornton, F.C., M. Schaedle and D.J. Raynal. 1989. Tolerance of red oak and American and European beech seedlings to aluminum. J. Environ. Qual. 18:541–545.

Wilkins, D.A. and M.J. Hodson. 1989. The effects of aluminum and *Paxillus involutus* Fr. on the growth of Norway spruce [*Picea abies* (L.) Karst.]. New Phytol. 113:225–232.

Zammit, C.A. and P.H. Zedler. 1988. Germination response to extreme acidity: impact of simulated acid deposition from a single shuttle launch. Environ. Expt. Bot. 28:73–81.