# HARDWOOD SUCCESSION IN THE IOWA DRIFTLESS AREA[1]

Kim D. Coder[2]

Abstract. -- Traditional views of compositional transitions, with disturbance and stress as outside influences, has provided a conceptual framework for forest succession that cannot support major short-term compositional shifts, differential colonization after disturbance (e.g. a clearcut), and long term, undisturbed composition changes (i.e. which are not mutually exchanging species) to other species in the neighborhood. Misjudgements of successional patterns have lead to silvicultural mistakes resulting in oak regeneration failures. This study suggests "succession" is both a gradual shifting of regeneration patterning and a punctuated change pattern. Successional change is brought about by a progressively more resource stressed understory beneath a resource dominating overstory, followed by brief "successional moments" when resources become available for compositional change. Successional change vectors are given for Iowa driftless area oak forests. Successional management techniques suggested by analysis are discussed.

Keywords: forest succession, interference, *Quercus alba*, *Quercus rubra*, *Acer saccharum*, *Acer nigrum*, fiefspace, regeneration, punctuated succession, successional moments, Markov chains.

## INTRODUCTION

Oak forest regeneration (i.e. primarily *Quercus alba* L. and *Quercus rubra* L.) is a problem in the driftless area of Iowa. The forests are composed principally of *Quercus*, *Carya*, and *Acer* species. *Fraxinus*, *Prunus*, *Juglans*, *Ulmus*, *Tilia* and other central hardwood species are minor constituents. These forests tend to be continually disturbed and occur at a transition of three major eco-regions (i.e. prairie, prairie parkland, and eastern forest (Bailey 1981). Oak in this area has been cited as an ecologically unstable species group and has been found difficult to manage with consistent results (Sander 1977). Difficulties have arisen establishing young oaks under oak canopies. Market preference and traditional forest values favor the objective of regenerating oak.

Oak stands have been regenerated using clearcutting and various types of shelterwooding (Roach and Gingrich 1968; Sander 1977; Barrett 1980). In practical application, these methods of regeneration have lead to undesirable species conversions of stands, extended rotations, and inconsistent production of desirable seedlings. Sugar maples (*Acer saccharum* Marsh., *Acer nigrum* Michx, and their hybrids) are a less desirable species group in the area that has colonized the understory of the oak stands. Maple is beginning to occupy more of the codominant crown positions. Sugar maple directly interfers with, and minimizes, oak regeneration (Coder 1985[3], 1986). Generally, oak forest regeneration by traditional techniques has not been consistently successful.

---

1/ Paper presented at the Sixth Central Hardwood Forest Conference, Knoxville, TN, February 24-26, 1987. Project funding provided by Iowa State University Department of Forestry, Iowa State University Agricultural and Home Economics Experiment Station, Projects 2486 and 2172, and USDA-Forest Service Cooperative Agreement FS-NC-1151,81-07.

2/ Assistant Professor, Extension Forester, and member of the Institute of Ecology, 211 Barrow Hall, The University of Georgia, Athens, Georgia 30602.

This study was developed to determine some of the active relationships between oak, the forest community in which it exists, and specific sites on which it grows.

To examine the oak regeneration problem, interrelationships between species and successional patterns were determined. Succession arises due to differential survival and growth of a set of species. Reproduction is the vehicle for moving succession. The purpose of examining successional patterns is to understand what occurs after disturbance. Once disturbance effects are understood, anthropological disturbances, such as harvesting, thinning, or prescribed fire can be appreciated in a successional context. Successional patterns in mixed hardwood forests have been found to follow no single unidirectional trend, but many trends all existing at one time (Stout et. al. 1975). Control of site resources seems to play an important role in regulating any compositional shifts (Coder 1985[3], 1986).

Many stresses such as grazing, fire, and cultural treatments can inhibit some species from maximizing their potential colonization and occupancy on a given site. The concept of a dynamic forest community, composed of individual reaction spheres (fiefspaces) was utilized as a framework to appreciate the ecological constraints on regeneration of a single species (Coder 1985)[3].

## METHODS

Successional pattern and mechanism elucidation were the objectives of this study. One-hundred-seven sample areas, each one acre (0.4047 ha.) in size, were examined. Samples were systematically distributed in each of five Iowa driftless area counties with at least 30,000 acres (12,141 ha.) of commercial forest land. Within each sample area, 30 milacre plots were identified for determining general site and stand characters, and reproduction stocking levels. Species identification and distribution were recorded for the overstory and understory. Number of stems by species, stem age, stem diameter, and information on the relative positions of the each stem were recorded.

Stocking of the major regeneration groups in the understory (i.e. area below primary and secondary overstories shown in figure 1 and less than 4 inches (10.2 cm) dbh), coupled with corresponding overstory species, were examined to determine successional trends. Forty-two species, categorized into 25 regeneration groups, were found reproducing on the sample areas. Cluster analysis of reproduction levels by Ward's minimum variance method was used to suggest 10 distinct regeneration groups (Sarle 1982; Howell and Sarle 1982). Regeneration groups produced by cluster analysis were composed principally of oak groups (42.8%), sugar maple groups (41.4%), and a cherry-basswood group (15.8%). Regeneration groups on each site were then compared with the primary and secondary overstory found associated with each. Graphical definition of overstory classification is given in figure 1.

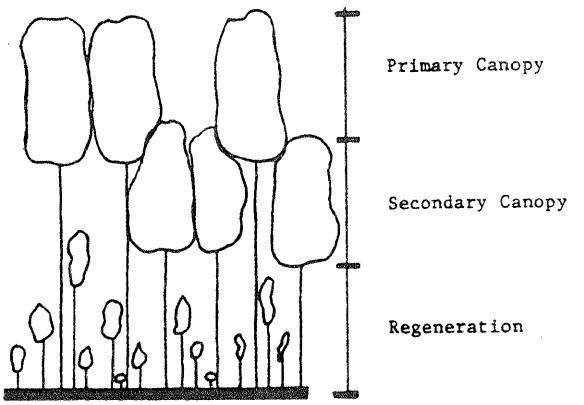


Figure 1.--Definitions of canopy layers.

A frequency analysis of all the different combinations of overstory groups and reproduction successful beneath them yielded a large number of discrete compositional combinations. Each site differed in the pattern of vertical and horizontal crown distribution and number of species groups present. The compositional "noise" produced by large numbers of species combinations was great. Many regeneration groups had high mortality rates and were expected to be removed from the site quickly.

From data over all sites, any regeneration group accounting for greater than 5% of the total amount of reproduction was considered important to the forest. A survival curve was developed for each important regeneration group on the basis of a ratio between the number of stems of regeneration and the number of overstory dominants. Cherry, for example, reproduces well but each stem has a relatively high chance of quick mortality. There is little chance of a stem of cherry attaining the overstory. To reduce the weight in the analysis of large number of stems from species with high mortalities, a relative regeneration importance number (RIN) was developed (Table 1). The lower the RIN value, the less important that species group is to the future forest.

---

3/ Coder, K.D. 1985. Regeneration ecology of oak in Eastern Iowa. PhD Dissertation. Iowa State University Department of Forestry, Ames, Iowa. 356 pp.

Table 1.--Regeneration importance numbers (RIN) for regeneration groups in the driftless area of Iowa.

| regeneration group | RIN |
|---|---|
| white oak | 3.3 |
| red oak | 2.6 |
| sugar maple | 2.5 |
| hickory | 1.2 |
| basswood | 1.2 |
| ash | 0.3 |
| cherry | 0.3 |
| other species | 0.0 |

RIN values were then multiplied by the stocking values of each regeneration group on each site. RIN values used in this way helped account for different survival rates by weighing stocking values. The RIN values provided for weighing a particular stem by its expected survival. Some stems are expected to survive for many years and be important in a stand, most will not.

Reading the RIN values in Table 1 would follow this example: One one-year-old stem of white oak with a RIN value of 3.3 is eleven times more likely to be available for attaining the canopy compared to a one-year-old stem of cherry with a RIN value of 0.3.

When each species stocking value was weighted by its regeneration importance number, less important species were functionally eliminated. RIN weighing rewards past reproductive success as shown by entry into the overstory. The less important species may triumph reproductively on a microsite or a set of microsites, by chance or by inhibition of other tree reproduction, but this species will have little effect on the compositional complexion of the forest. For example, hackberry (Celtis occidentalis L.) capturing and holding one microsite is inconsequential in a forest dominated by reproducing oak and maple.

All minor species (i.e. unimportant species as defined above) were combined into a separate compositional group called "other species" for pattern determination. This is not to imply that all minor regeneration groups respond in a similar manner within the understory, but that each species group is not important to the management of the stand due to its isolation. A few areas of the understory will always have minor species present; their probability of regenerating will never be zero.

When the primary and secondary overstory information on each site were combined with the associated RIN-weighted regeneration types occurring underneath, successional vectors were produced (fig. 2). Some species groups dropped out all together. In figure 2, a slash between two symbols denotes that the first is in the primary overstory position and that the second is in the secondary position (position definition in fig. 1). A dash between symbols denotes sharing of the primary overstory between the two groups. The flow values listed are the percentages of sites moving in that specific direction.

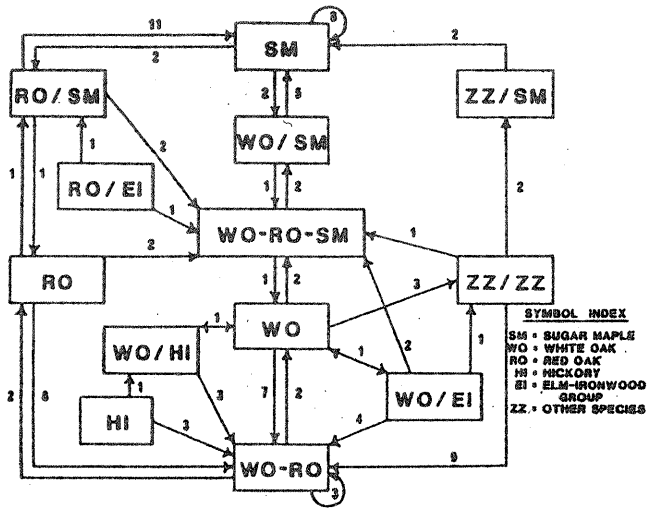


Figure 2.--Successional flow diagram for the forests of the Iowa driftless area.

To better understand the consequences of the flow pattern in figure 2, a Markov chaining process after Horn (1981, 1975, 1971) was developed for examining the internal flow pattern of the diagram. Markovian analysis can suggest what direction the compositional flow is moving and what may be done to change the flow pattern in favor of oak. Low species diversity and an excess of microsites available for regeneration in these forests suggested that this analysis tool was of value.

The flow values in figure 2 were used as the "regeneration" matrix in the analysis. A row matrix representing any forest composition is multiplied by the regeneration matrix (i.e. flow probabilities) producing a new forest composition matrix. The new forest composition matrix is then multiplied by the same regeneration matrix. This matrix multiplication continues until no significant changes occur in the forest composition matrix. When no significant changes occur, a steady-state composition has been reached.

Species patterning examined from the reproduction stage through crown dominance/codominance stage suggested that adjustments needed to be made in the theoretical "rules" governing species replacements in these forests. The foundation of all compositional change in these forests would seem to be based upon strict resource control through species interactions.

## RESULTS AND DISCUSSION

Flow rate values between the species groups in figure 2 are the percentages of sampled sites moving in a given direction. For example, overstory white oaks, with successfully regenerating white and red oak beneath, would compositionally move toward a stand of red oak/white oak at a relative rate of 7. One interesting point derived from figure 2 is that the sugar maple and the white oak/red oak group are the only regeneration groups reproducing themselves. All other stands are moving toward them. The pivotal flow cell is in the center of figure 2 where a combined oak/maple group exists. Figure 2 suggests that current selective pressures favor sugar maple.

Table 2 shows the results from the Markovian analysis. The initial compositional movement is toward oak with the eventual success of sugar maple. The final state being approached is one dominated by sugar maple with the oaks still present in the stands. Oak is not eliminated but greatly lessened in importance. Table 2 suggests that if the regeneration success and survival of sugar maple can be decreased (i.e. flow pattern short-circuited), oak dominance can be maintained or increased in the study areas.

Table 2.--Identifying the major flow patterns within figure 2 using Markov chain analysis (short term = 1-5 iterations; long term = steady state equilibrium).

| starting percentages | short term dominance | long term dominance | iterations |
|---|---|---|---|
| field data | 36% WO-RO<br>29% SM<br>11% WO-SM-RO | 46% SM<br>15% WO-RO<br>11% WO/SM | 19 |
| 100% WO-SM-RO | 67% WO/SM<br>33% WO | as above | 11 |
| 50% RO/50% WO | 62% WO-RO<br>16% WO-SM-RO | as above | 27 |
| 100% WO | 42% WO-RO<br>29% RO<br>29% WO | as above | 30 |

The number of iterations used in a Markovian process can suggest compositional flow disruption. The larger the number of iterations, the longer the system took to attain a stable state. The presence of sugar maple in a stand quickly pushes compositional flow toward the steady-state point (e.g. the first two starting percentages in Table 2). When sugar maple is totally excluded from the immediate neighborhood at the beginning, the steady state point is not reached for a much longer period of time.

Table 2 suggests that continual selective pressure against sugar maple would keep the compositional flow pattern away from equilibrium indefinitly. A quasi-stationary state could be maintained where the oaks remain as stand dominants. This pattern may be functionally similar to the early fire dominated systems that maintained oaks in the driftless area over the last millennium.

Compositional patterning and its change over time, (i.e. forest succession) was found to be a combination of gradual change in a broad sense over the forest, and of rapid change within each stand. Stands undergo punctuated change (after Gould and Eldredge 1977) brought about by years of tight resource control followed by periods of rapid reordering of resources when major resource dominators (i.e. fiefspaces) decline and die. Succession, in the long term, is composed of gradual compositional shifts, attained by rapid, periodic bursts of resource control adjustments.

The resulting appearance of successional change is shown by many years of progressively greater resource stress in the understory with constant overstory composition. Eventually, a few "successional moments" occur when enough resources become available on the site for colonization and survival. Successional moments are initiated during the decline phase of major fiefspaces. A fiefspace is the area of influence of a tree, including its reaction surface and its boundary layer both above and below ground. Within a fiefspace of a tree, resources are controlled to a degree that may minimize reproduction of other individual trees. There is a hierarchy of fiefspaces in the forest from site resource dominants down to first-year seedlings, all managing their interference control. Interference is the combination of allelopathic and competitive effects.

## CONCLUSIONS

In the Iowa driftless area, failure to appreciate the pressures behind compositional changes have led to silvicultural treatments and stand management that maintain or increase the importance of sugar maple while decreasing oak. This has led to the perception of oak regeneration problems in many of these stands.

Oak can be successfully regenerated by returning to stand management that puts selective pressure against sugar maple. This selective pressure can be by carefully controlled prescribed fire, or by periodic cleanings in the understory. Tightly controlled, intensive periods of grazing could

also provide a selective disturbance regime. Open understories with little secondary overstory canopy will maximize the probabilities of oak successfully regenerating.

Most individual stems available for expanding their area of influence (fiefspace) were growing under the influence of the old overstory stems during fiefspace decline periods. The sudden death of an overstory tree is not an expected alternative without catastrophic occurrences. Slow death is the common result from external interference and internal compartmentalization constraints.

Individuals becoming established only around the time of significant resource availability (i.e. tree death) can also become contenders for overstory positions depending upon the biological and positional status of other interfering stems. Since the successional moment begins to occur during the decline phase in major fiefspaces, the highest probability of eventual overstory entrance rests with individual stems that have been both established earliest and are most tolerant of interference. Some probability will always exist for any species in the neighborhood that can get propagules to the site to regenerate and attain the overstory.

The key point in successional change is the ability of individuals to deliver propagules to sites where major fiefspaces are in decline. Since many of the fiefspace expansions and contractions occur within the same species, the net compositional change in a stand can seem to be zero. Functionally, the probabilities of propagule delivery favors the nearest neighbors and the declining individual. But the distribution patterns or dispersal spheres of the propagules from other individuals can effect the eventual overstory champion.

In summary, the complex mosaic of stands seen in these forests are a result of quick compositional changes and long periods of inhibited colonization as a result of resource control by the trees already present. The battle for available resources is intense between stems especially in areas where resources have been recently released from dominance. Rapid changes in species replacements have resulted in the perception of a gradual decline of oak in the Iowa driftless area forests. These events, and the perception of these events, can be reversed by proper ecological based management.

## LITERATURE CITED


Bailey, R.G.
1981. Description of the ecoregions of the United States. USDA - Forest Service miscellaneous publication #1391.

Barrett, J.W.
1980. Regional silviculture of the United States. 2nd edition. John Wiley and Sons, New York. 551 pp.

Coder, K.D.
1986. Successional basis of oak forest decline in the Iowa driftless area. Proceedings of the ninth North American forest biology workshop. Stillwater, OK.

Gould, S.J. and N. Eldredge.
1977. Punctuated equilibria: The tempo and mode of evolution reconsidered. Paleobiology 3:115-151.

Horn, H.S.
1971. The adaptive geometry of trees. Princeton University Press, Princeton, New Jersey. 144 pp.

Horn, H.S.
1975. Markovian properties of forest succession. Pp. 196-211 in M.L. Cody and J.M. Diamond, editors. Ecology and evolution of communities. Belknap, Cambridge, Mass.

Horn, H.S.
1981. Succession. Pp. 253-271 in R.M. May, editor. Theoretical ecology. 2nd edition. Sinauer Associates, Sunderland, Mass.

Howell, G.K. and W.S. Sarle.
1982. TREE - SAS software. In SAS user's guide: Statistics. SAS Institute, Inc., Cary, North Carolina.

Roach, B.A. and S.F. Gingrich.
1968. Even-aged silviculture for upland central hardwoods. USDA - Forest Service agricultural handbook #355.

Sander, I.L.
1977. Manager's handbook for oaks in the North Central states. USDA - Forest Service general technical report NC-37.

Sarle, W.S.
1982. CLUSTER - SAS software. In SAS user's guide: Statistics. SAS Institute, Inc., Cary, North Carolina.

Stout, B.B., J.M. Deschenes, and I.F. Chmann.
1975. Multi-species model of a deciduous forest. Ecology 56:226-231.