A SUMMARY OF INFORMATION RELATING TO THE ECOPHYSIOLOGY OF WHITE OAK (QUERCUS ALBA L.)

Phillip M. Dougherty[1], Gene S. Cox, Thomas M. Hinckley

ABSTRACT

This paper reviews the ecophysiological work on white oak (Quercus alba L.) with special concentration on research completed at the Ashland Wildlife Area of the University of Missouri. Fowells (1965) listed four characteristics of white oak which contribute to its success over most of the eastern and central portions of the United States. The reviewed work presented herein, on water relations, photosynthesis and growth, concentrates on unifying Fowell's characteristics with our observations.

INTRODUCTION

White oak (Quercus alba L.) is a major component of three forest types: (1) white oak - northern red oak (Q. rubra L.) - hickory (Carya spp.), (2) white oak, (3) yellow poplar (Lirodendron tulipfera L.) - white oak - northern red oak (Fowells, 1965; Fralish, 1976; Clark, 1977; Fralish et al. 1978). In the central and southern states, white oak is mostly associated with upland oaks such as black (Q. velutina Lam.) and northern red; however, it does occur as a minor component with post (Q. stellata Wangenh.) and blackjack oak (Q. marilandica Muenchh.). The southern and eastern extension of white oak appears to be coincident with the occurrence of vertisols or soils in the aquic suborder rather than with extreme temperatures or evaporative demands. White oak's intolerance to flooding and poor drainage is well known (Teskey and Hinckley, 1977). The western extension of white oak coincides with the presence of prairie soils and a zone of increasing evapotranspiration.

White oak in the central and southern United States is considered a climax species. However, its dominance is site dependent. The drier sites in this region are usually occupied by black or post oak while on more mesic sites, northern red oak exist. In the southwestern extension of its range, white oak is usually restricted to north or northeast facing slopes.

Fowells (1965) summarized the available literature and identified four characteristics which permit white oak to become dominant on much of the forested area in the central and southern United States. The characteristics he identified were: (1) the ability to live vigorously for periods as an overtopped tree, (2) a rapid response to release, (3) a moderate to fast growth rate in full sunlight and (4) great longevity.

---

[1] Phillip M. Dougherty, Weyerhaeuser Research Center, Centralia, WA 98531, Gene S. Cox School of Forestry, Fisheries and Wildlife, University of Missouri, Columbia, MO 65211, and Thomas M. Hinckley, College of Forest Resources, University of Washington, Seattle, WA 98195.

In addition, several recent studies have cited white oak's ability to tolerate droughts as an important contributor to its success. The characteristics listed by Fowells (1965) are observed growth responses and, therefore, each must have a physiological basis. This paper will interpret the ecological and physiological information gained through a series of studies at the University of Missouri and elsewhere in light of the observed growth responses cited by Fowells (1965) and others.

DISCUSSION

Aspects of the hydrology or nutrient relations of hardwood forests dominated by white oak will not be covered herein. Readers are referred to Akhtar et al. (1976), Luxmoore et al. (1978) and Settergren et al. (1976). This review will concentrate on aspects of drought resistance, photosynthetic capacity and growth.

Drought Resistance

The mechanisms responsible for drought resistance of white oak and associated upland oaks have been studied by several authors (Seidel, 1972; Teskey et al., 1978; Hinckley et al., 1979; Parker 1980). These studies have included examination of aspects of both drought avoidance and drought tolerance.

Drought tolerance: Seidel (1972) compared the drought tolerance of white oak, northern red oak and black oak seedlings by subjecting leaf discs to a series of relative humidites for 48 hours. He then assessed the number of living cells and used this as an index of drought tolerance. He concluded that the drought tolerance of white oak and black oak were equal and both were more drought tolerant than northern red oak.

The actual mechanism which permits drought tolerance in plants is believed to be related to both physiological and structural characteristics which allow a stress to be endured and not become lethal. Changes in the plant components responsible for drought tolerance are not easily measured. However, factors such as leaf osmotic potential and elasticity, which regulate the intensity and duration of water potentials that must be tolerated by the plant, can and have been measured. Both white oak and northern red oak actively adjust their osmotic potentials to lower osmotic potentials during the dry part of the growing season (Parker, 1980) and thus would be expected to tolerate low leaf water potential.

Hinckley et al. (1978) reported slightly lower whole leaf osmotic potential values for white oak than northern red oak (-2.34 vs -2.17 mPa). Parker (1980) using the pressure-volume technique, found little difference in the osmotic potential at the turgor loss point for these two oak species (white oak = -2.39 northern red oak = -2.43 MPa). Based on Parker's results, the intensity of water potential which white oak and northern oak would have to tolerate would be similar if the level of leaf water potential developed was governed only by the osmotic potential at the turgor loss point. However, Parker (1980) found that white oak leaves had a modulus of elasticity 50-70 percent greater than northern red oak and this indicated that white oak leaves were more inelastic than northern red oak leaves. This would result in white oak leaves being subjected to lower leaf water potentials

than northern red oak at similar leaf relative water contents. Thus the duration that leaves would be exposed to low leaf water potentials may be greater for white oak than northern red oak. The actual duration and intensity of water potentials are not totally dependent on leaf properties but are closely linked to other growth strategies such as total leaf area, leaf morphology, rooting characteristics and other adaptions that will be considered as drought avoidance traits in the following section.

Drought Avoidance

Drought avoidance by trees is usually accomplished by traits which either enhance water uptake and/or regulate water loss to the extent that internal water deficits are reduced. The major drought avoidance mechanisms studied in trees have been:

I. Water loss properties

- Leaf Conductance Properties
  - Maximum conductance
  - Sensitivity to water stress - Threshold water potential
  - Minimum conductance
    - completeness of stomatal closure
    - cuticular resistance
- Leaf Area
  - Size of leaf area compliment
  - Orientation of leaves with respect to incoming radiation
  - Duration of leaf area
  - Distribution of leaf area along the stem
- Internal Storage Capacity

II. . Water Uptake

- Root Characteristics
  - Rooting depth and width
  - Rooting intensity
  - Water uptake efficiency -
    - with respect to water supply
    - with respect to temperature
    - with respect to age

Leaf Water Exchange Properties

In a study designed to compare the stomatal conductance of white oak and northern red oak, Chambers (1976) found that the maximum stomatal conductance was higher for white oak than northern red oak. Both Chambers and Parker (1980) reported that stomatal conductance in northern red oak leaves decreased at a higher leaf water potential and at a more rapid rate than for white oak leaves. Other studies which compared only the threshold leaf water potential values for stomatal closure for white and northern red oak also reported higher threshold water potential values for northern red oak than white oak (Phelps *et al.*, 1976; Hinckley *et al.*, 1978). These results

would suggest that the osmotic potential at the turgor loss point (TLP) for white oak leaves would be lower than that of northern red oak; however, as discussed in the previous section, measured values of the osmotic potential at the turgor loss point for the two species were similar. Actual stomatal closure for northern red oak leaves occurred at leaf water potentials considerably higher than would exist at the turgor loss point; while for white oak leaves only a small discrepancy existed between the actual threshold water potential value for stomatal closure and the leaf observed water potential at the turgor loss point (Parker, 1980).

The higher threshold water potential for stomatal closure in northern red oak than for white oak leaves implies that northern red oak is more of a drought avoider than white oak. But, when Siedel (1972) compared the leaf water potential of excised leaves of white oak, black oak and northern red oak, desiccated under uniform conditions, he found that northern red oak developed a lower water potential than white oak or black oak. If stomatal closure in northern red oak occurred at a higher water potential than in white oak, as suggested above, then the development of lower leaf water potential in northern red oak leaves than in white oak leaves under uniform drying conditions suggest that either stomatal closure was more complete in white oak than in northern red oak or that cuticular conductance was higher for northern red oak leaves than white oak leaves. The aspect of minimum conductance of white oak and northern red oak needs to be investigated further because it may determine the efficiency with which the leaves regulate water loss at critical levels of internal water potential and thus may ultimately determine the level of stress leaves would be exposed to under prolonged drought periods.

Leaf Area Characteristics of White Oak

Whole plant transpiration is a product of the water exchange properties of individual leaves and the total leaf surface area maintained by the tree. The distribution and orientation of the leaves along the stem and the duration which the leaves are maintained are also important in determining potential whole plant transpiration rates.

Total Surface Area: Leaf area index for the oak-hickory forest has been reported to range from 4 m^2/m^2 (Monk et al. 1970) to near 7 m^2/m^2 (Thompson and Hinckley, 1977). No direct comparison of the oak species could be found in the literature. In the first year from seed, white oak does appear to allocate less energy into the formation of leaves and more into root growth than does northern red oak (Farmer, 1980). Whether this allocation pattern is maintained or not is not clear. Equations developed to predict foliar biomasses from diameter for white oak and northern red oak, predict greater foliar biomass for northern red oak than white oak (Blackman and Ralston 1968, Johnson and Bell 1976). Also Rogers and Hinckley, (1979) observed that per unit sapwood area, black oak carries more foliage than white oak. This does not necessarily mean that white oak has a lower leaf area than northern red oak or black oak because the specific leaf weights of the two species may be different. Also one must be sure that the relative densities of the stands from which the trees were sampled for comparison of biomass were similar before valid comparisions can be made. For example, leaves of white oak growing in the understory had a surface area of 200 cm^2 per gram while foliage occupying the upper canopy position had 111 cm^2 surface area per gram (Monk et al., 1970)

Leaf Area Distribution: Investigations of the distribution of leaves along the stem of a 19 m white oak indicated that approximately 50 percent of the foliage was within the upper 4 m of the crown (Thompson and Hinckley, 1977, Aubuchon et al., 1978). Clumping of the foliage in the upper crown ensures high energy loading and thus exposure to high evaporative demands and temperature regimes. Morphological changes, persumably in response to the higher energy loading, have been reported. These changes include; 41 percent smaller leaves, deeper lobed leaves and 41 percent heavier leaves in the upper canopy, as compared to leaves in the lower canopy (Rogers 1975). Smaller, more dissected leaves would be expected to permit a more rapid dissipation of absorbed energy and thus help avoid leaf temperature buildups. For example, when radiation loads were observed to be 192 percent greater for upper canopy foliage then lower canopy foliage, leaf temperature of upper canopy foliage was only 9 percent greater than that observed for lower canopy foliage. This small difference in leaf temperature under extreme differences in radiation loading was probably due both to the conductive heat exchange properties relating to leaf morphology and to continued latent heat exchange due to continued transpiration.

Leaf Area Duration: No loss of white oak leaves was observed during the extreme summer drought experienced in central Missouri in 1976 (Dougherty 1977). Other studies involving established white oak trees have also indicated that a near constant leaf area was maintained over the period between leaf establishment and leaf senescence in the fall (Thompson and Hinckley) 1977, Chaney 1979). Established white oak trees probably do not utilize drought stimulated leaf senescence as a drought avoidance mechanism.

Water Uptake

Root System: Most oak species in the United States develop deep root systems (Figure 1). Farmer (1980) found that white oak seedlings have a lower root to shoot ratio than northern red oak. This should permit a white oak seedling to maintain a more favorable water balance than northern red oak. The importance of the balance between transpiration surface area and absorbing surface area in regulating oak seedling growth has been well documented (Borchert, 1975). Whether white oak maintains a lower shoot/root ratio throughout its life span than northern red oak is not certain. There has been some sketchy evidence reported which indicated that white oak does have a deeper root system than northern red oak (Stout 1968, Hinckley et al., 1980). White oak roots are believed to be able to penetrate soil horizons high in clay content better than roots of northern red oak (Wistendahl 1975, Graney 1977). This attribute would be important in drought avoidance because many of the soils on which white oak occur have argilic horizons. White oak roots also have been reported to be able to continue growth when the surrounding soil water potential was -1.2 MPa (Teskey et al. 1978), thus establishing new roots which have a lower resistance to water uptake (Teskey and Hinckley 1980) and increasing the capacity to penetrate into areas of soil not previously exploited.

WHITE OAK PHOTOSYNTHESIS

Development of the Photosynthetic Surface

The time of the year when leaves are initiated varies widely among the hardwood species which compose the central deciduous forest. Bell and Johnson (1975) found considerable variability among genera in the initial

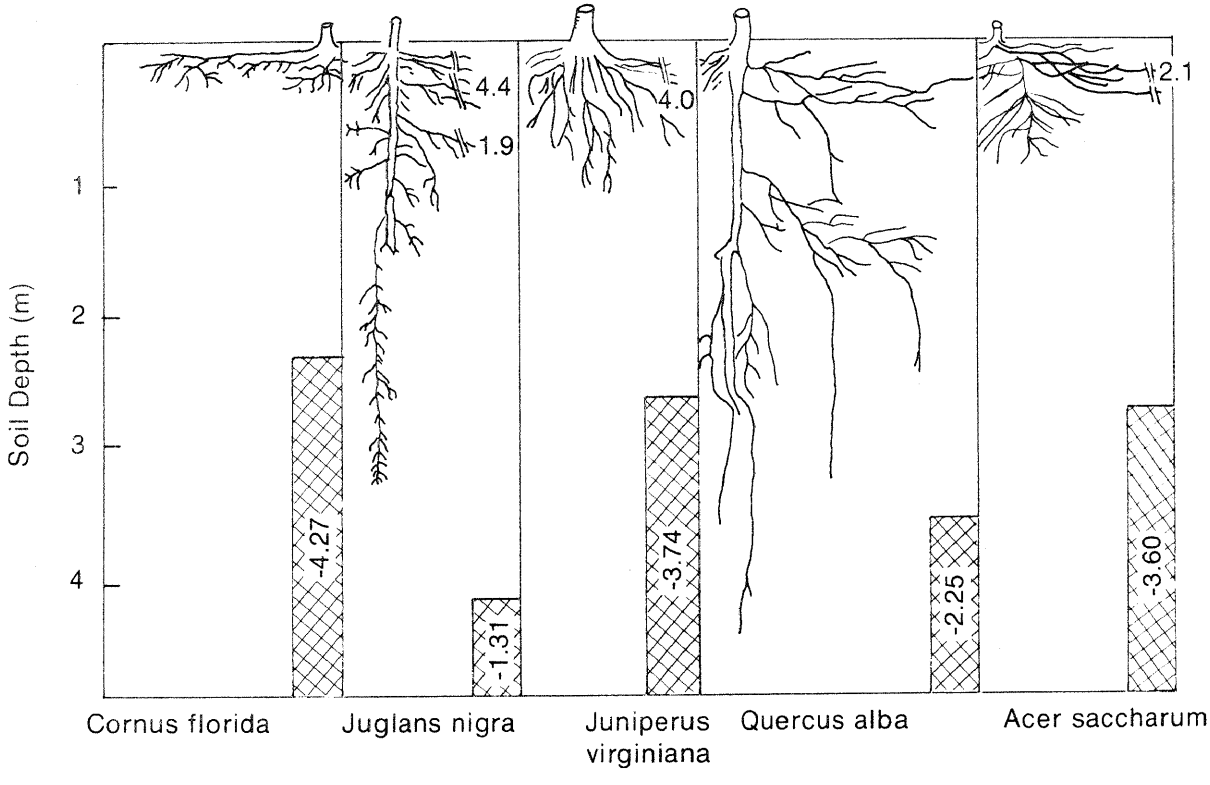

Figure 1. Distribution of roots Cornus florida, Juglans nigra, Juniperus virginiana, Quercus alba, Acer saccharum and minimum leaf water potential at predawn during a severe drought (Figure is from Hinckley et al., 1980, Academic Press, London and New York).

stages of leaf expansion, but much less variability was observed between the times at which leaves of all genera attained full size. The contribution of early leaf expansion to net seasonal carbon gain depends on how soon, to what extent and at what point the developing leaves become involved in positive carbon exchange. Young expanding leaves are capable of relatively high CO_2 uptake rates under ideal conditions (Dickmann, 1971; Taylor and Pearcy, 1976). However, conditons may not always be ideal. In addition, premature leaf expansion increases the risk of exposure to frost. It is, therefore, important to understand the interaction between the rate of leaf expansion and development and the prevailing environmental conditions during this period.

In comparision to other hardwoods, white oak begins leaf expansion relatively late in the spring (Bell and Johnson, 1975). Leaf expansion is normally completed within a 25 to 35 day period (Figure 2,3). Additional leaf area may be added by subsequent flushing. This is especially true for white oak sprouts for which individuals were observed to flush for a 13 week period (Johnson, 1980). In central Missouri and southern Illinois, initial leaf expansion begins around mid-April and is complete by mid to late May (Bell and Johnson, 1975; Hinckley et al., 1976, 1979). Northern red oak appears to break bud and begin leaf expansion earlier than white oak, but leaves of both species reach full size at approximately the same date (Hinckley et al., 1979). Earlier bud break may be expected for shade grown oak seedlings (McGee, 1976).

During the period between mid-April and mid-May, freezing temperatures periodically occur in the central states. For example, a 6-day period of minimum temperatures near or below 0°C occurred during the first week of May in 1976. This resulted in a complete arrest of leaf expansion in all oaks. Frost damage to expanding white oak leaves was apparent, but it was much less than observed for northern red oak which were 25-30 percent of final size when the freeze occurred (Dougherty, 1977). Developing tissue of white oak has been reported to be able to tolerate temperatures near -4°C (Sharpe et al., 1961).

Tryon and True (1968) studied the ability of several deciduous species to reestablish foliage and exhibit normal stem diameter growth following an early spring freeze. Trees such as American beech (Fagus grandifolia Ehrh.), yellow-poplar and white ash (Fraxinus americana L.) which initiated leaves early in the spring, were not able to totally reestablish their foliage and exhibited below average stem growth following a late freeze. However in their study, northern red oak was able to reestablish a normal foliar surface and exhibit no loss in stem diameter growth. The low resiliency in response to frost damage in tree species in which leaf development is early may be related to a reduction in stored reserves associated with the earlier investment in new leaves. In situ contributions of photosynthate produced by the developing tissue may also vary between trees and may be important in offsetting depletion of storage reserves in the leaf establishment period.

Photosynthesis of Developing Tissue

In leaves less than 10 percent of full size stomatal development may largely control the photosynthetic rates of the leaf. Stomatal development in the expanding leaf appears to be independent of leaf expansion itself

Figure 2. Seasonal patterns of growth, photosynthesis and carbohydrate translocation over a two-year period in Quercus alba (from Dougherty, 1977; Hinckley et al., 1979, Dougherty et al., 1979; McLaughlin et al., 1979).

A. Soil temperature (T^{soil}) and soil water potential (Ψ^{soil}) averaged for a 1.2-m profile.

B. Time of bud opening of seedlings (vertical line) and period of maximum leaf growth (solid bar).

C. Same as B except for adult trees. *-initiation of leaf color, vertical line - initiation of leaf fall, cross hatched area - period of maximum leaf fall.

D. Root growth (= average rate of root elongation x number of growing roots) of seedlings for entire profile.

E. Stem cambial and root (calculated as in D) growth for trees. Acorn growth on a cumulative basis is also shown.

F. Average (0500-1800 readings) rates of net photosynthesis (Ph_n) for foliage of the upper crown. The solid line is the boundary line (assumed to represent maximum average Ph_n) while the points are actual averages.

G. Patterns of translocation of photosynthate in foliage and branches for the entire crown of a tree. (Figure is from Hinckley et al., 1980. Academic Press, London and New York).

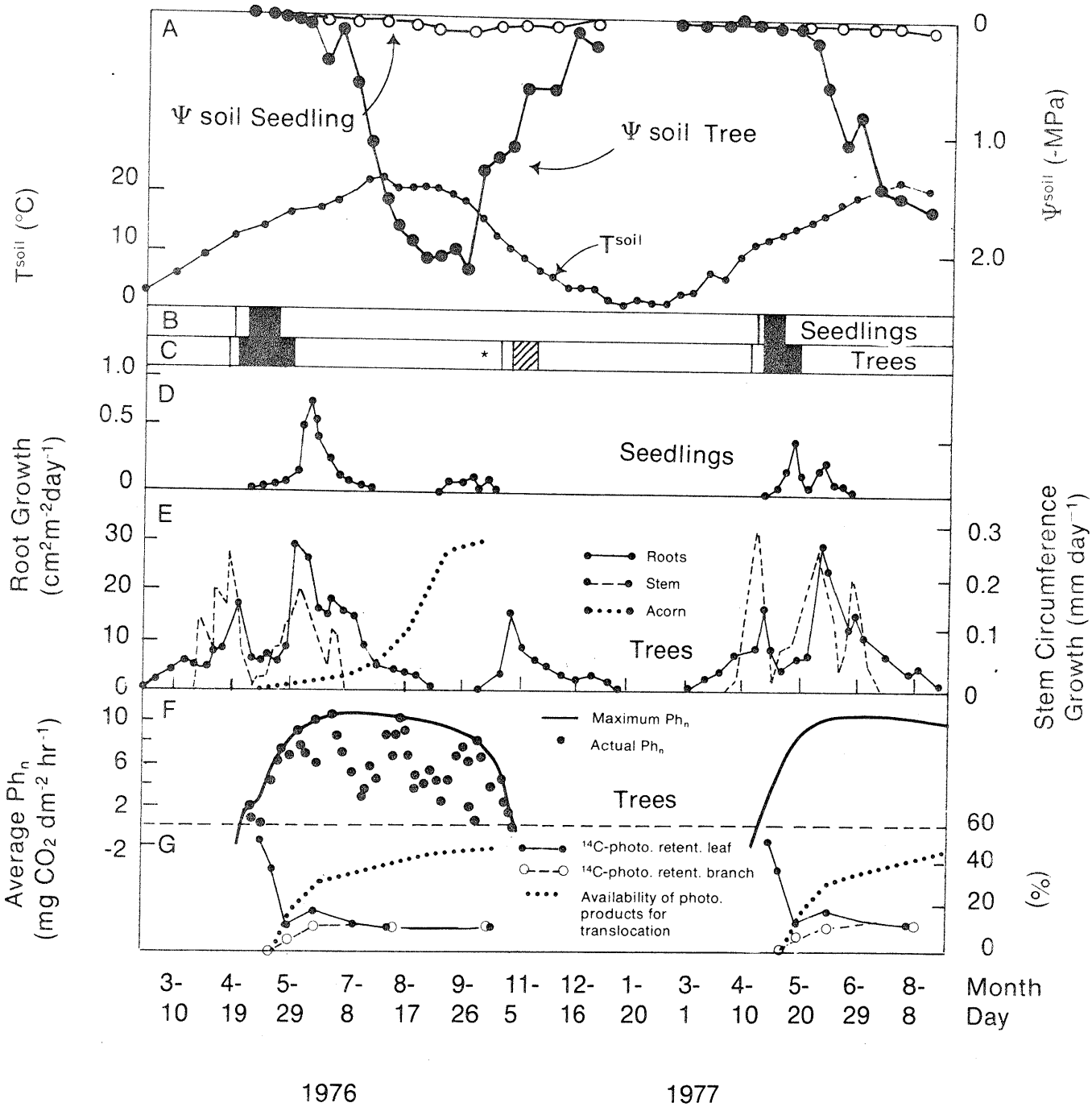
A
Ψ soil Seedling
Ψ soil Tree
Tsoil
Tsoil (°C)
Ψsoil (-MPa)
B
C
Seedlings
Trees
D
Seedlings
Root Growth (cm²m⁻²day⁻¹)
E
Roots
Stem
Acorn
Trees
Stem Circumference Growth (mm day⁻¹)
F
Maximum Phn
Actual Phn
Trees
Average Phn (mg CO2 dm⁻² hr⁻¹)
G
14C-photo. retent. leaf
14C-photo. retent. branch
Availability of photo. products for translocation
(%)
3-10
4-19
5-29
7-8
8-17
9-26
11-5
12-16
1-20
3-1
4-10
5-20
6-29
8-8
Month
Day
1976
1977

Figure 3. A two-year diagrammatic model of growth and physiological processes within a white oak (I) tree and (II) seedling. The monthly calendar is at the top of each diagram. The diagram has been divided into three parts, the activity of the root, shoot, and reproductive systems. The following abbreviations were used: AC = acorn growth, CA = cambial growth, FL = flower growth or set, Gr = growth, Le = leaf, PH = photosynthesis, RG = root growth, Sh = shoot growth, and ST = storage. Storage occurs both in the roots and shoots. Within a category such as root growth, a solid line means that this event is occurring and a dashed line indicates that it may be stress (temperature, water and other growth activities) limited. The seedling contrasts with the tree by not having any reproductive events and by the capability of multiple flushes.

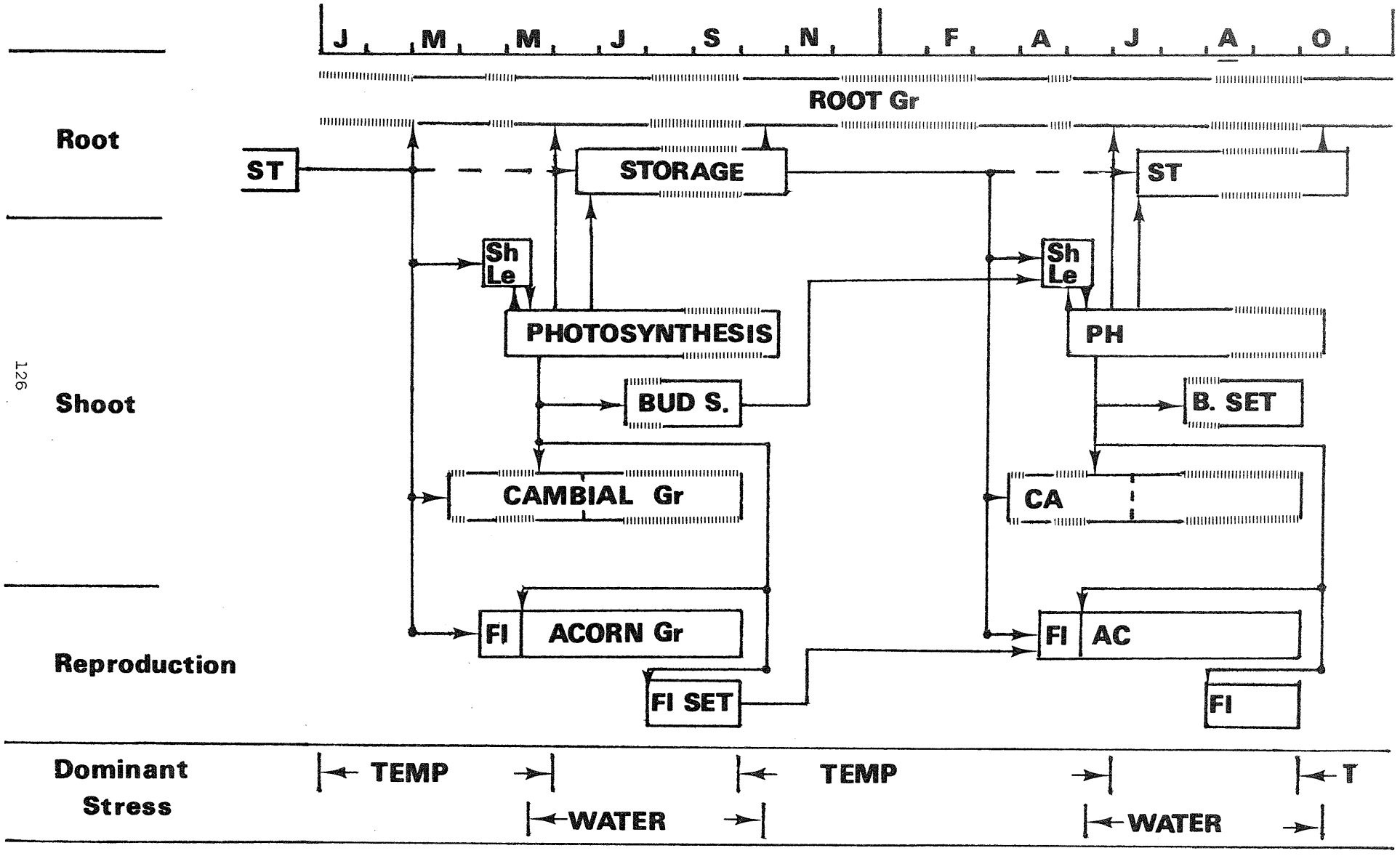
J
M
M
J
S
N
F
A
J
A
O
ROOT Gr
Root
ST
STORAGE
ST
Sh
Le
Sh
Le
PHOTOSYNTHESIS
PH
Shoot
BUD S.
B. SET
CAMBIAL Gr
CA
Fl
ACORN Gr
Fl
AC
Reproduction
Fl SET
Fl
Dominant
Stress
TEMP
TEMP
T
WATER
WATER

(Turner and Heichel, 1977). In expanding leaves of white oak, the extremely young leaf has an incompletely developed cuticle, stomata which vary in stage of development and heavy pubescence (Dougherty et al., 1980). In additon, many of the stomata have a wax covering. A waxy membrane which covered the stomata of northern red oak was also reported by Turner and Heichel (1977). Leaf conductance of both white and northern red oak leaves was low and the stomata did not appear responsive to changes in light intensity for the first 7 to 14 days following appreciable leaf emergence from the bud. These results indicate that gas exchange from the young (one to two week old) leaves would be low and thus would not permit significant rates of photosynthesis to occur (Dougherty et al., 1979). (Figure 2).

White oak leaves which had expanded to greater than 10 percent of their final size exhibited positive rates of net photosynthesis (Dougherty et al., 1979). At 21 percent of their final leaf size, net photosynthesis was about 5 mg CO_2 dm^{-2} h^{-1} (Dougherty et al. 1979). Maximum net photosynthetic rates corresponded to the attainment of full leaf expansion and final leaf size. The actual amount of photosynthate produced during the developmental period will be influenced by climatic conditions as well as by the stage of leaf development. Since low air temperatures and radiation conditions are prevalent during much of the development period in Missouri, climate frequently reduces photosynthesis below the potential maximum for white oak when light and temperature are optimized (Dougherty et al., 1979; Hinckley et al., 1980, Figure 2). As one means of photosynthetic adaptation to cool temperatures, both white and northern red oak shift their leaf temperature optima for net photosynthesis as average air temperature shifts (Chabot and Lewis, 1976; Dougherty and Hinckley, 1980).

During the period of leaf expansion, the elongating shoot does appear to partially offset respiration and thus reduce the demand on carbon reserves (Dougherty et al., 1979, Parker; 1978; Coe and McLaughlin, 1980). Rapid development of the photosynthetic capacity of leaves and stems would be important in offsetting the dependence of growth activities on stored reserves. Four major sinks for stored food exist in white oak prior to the time when leaves attain the ability to export photosynthate (McLaughlin et al.,) 1979, 1980). These sinks include the developing root, stem, leaf-shoot and flower (Figures 2 and 3). Root growth may precede bud burst by as much as 38 days, while stem growth may occur 16 days prior to bud break. During this period of initial growth, stored reserves do drop dramatically (McLaughlin et al. 1980).

Photosynthesis of Mature Tissue

Net photosynthesis rates of near 15.0 mg CO_2 dm^{-2} hr^{-1} are possible over the entire period between June, when leaves are fully expanded, and mid to late October when senescence occurs (Dougherty and Hinckley, 1980). Occasional rates as great as 19.0 mgCO_2 dm^{-2} hr^{-1} have been observed (Dougherty and Hinckley, 1980). The photosynthetic capacity of lower crown foliage of white oak was reported to be the same as upper crown foliage if light and leaf temperature were adjusted to similar levels (Aubuchon et al., 1978). However, the attenuation of incoming radiation by upper canopy foliage does result in considerably lower rates of photosynthesis being observed for foliage in the lower canopy than for upper canopy foliage (Aubuchon et al., 1978).

The reported net photosynthesis rates of white oak are slightly lower than those reported for several early successional hardwood species common to the central Missouri region (Bazzaz et al., 1972; Bacone et al., 1976) but are greater than those previously reported for late successional species such as northern red oak (Geis et al. 1971, Dinger 1972, Lassoie and Chambers 1976: Hinckley et al., 1978) and sugar maple (Hinckley et al., 1978).

Actual rates of net photosynthesis observed are usually much less than those possible if light and temperature were optimized. Net photosynthesis of leaves of a 19 m white oak tree were reduced as much as 82 percent of the potential rate (i.e. when light and temperature were optimized) under unfavorable periods of soil moisture and evaporative demand (Dougherty and Hinckley, 1980, Figure 2). Both reduced leaf conductance and above optimum leaf temperature limit net photosynthesis under these conditions. Moderate rates of net photosynthesis were observed for white oak leaves under cloudy conditions even when soil water potential was less than -1.8 MPa if evaporative demand was low. The ability to photosynthesize under this combination of conditions appeared to be related to a low light saturation point (500-700 μmoles m^{-2} s^{-1}) of the photosynthetic process, a low rate of dark respiration (1 to 2 mg CO_2 dm^{-2} hr^{-1}) during moisture limiting conditions and a low threshold leaf water potential for stomatal closure (between -2.4 to -2.7 MPa).

Growth Patterns of White Oak

Optimal allocation of photosynthate to the various growth, maintenance and storage channels is important in a tree's effort to successfully establish and maintain itself in a stand (Figures 2 and 3). White oak has growth characteristics similar to the late successional hardwood groups described by Marks (1975) in which shoot extension for older trees occurs only for a short period early in the season (Hinckley et al. 1976, McLaughlin et al., 1980). Both root and stem growth precede shoot extension growth, pause during shoot and leaf extension, and then resume after leaves are fully expanded (Dougherty et al., 1979). Much of the early growth is dependent on stored food and stored reserves drop dramatically in the spring (McLaughlin et al., 1980). However, the rapid maturation of foliage, the high photosynthetic capacity of the mature foliage and the ability of white oak to photosynthesize during drought conditions allows storage reserves to be refilled (McLaughlin et al., 1980). During the typical dry period of each summer in Missouri, stem and root growth often cease (Boggess, 1956; Teskey et al., 1978, Parker, 1979). Following late summer or early fall rains, root growth resumes again (Teskey et al., 1978, McLaughlin et al., 1980).

The rate of height growth of the various oak species varies with age and species (Carmean, 1971, Graney and Bower, 1971;) (Figure 4). It is known that white oak maintains a slower rate of growth for the first 50 years than black or northern red oak. However, after age 50, the rate of height growth of white oak is more rapid than northern red or black oak. The mechanism for such a growth pattern is not known but may be responsible for white oak's greater longevity than other oak species. Perhaps white oak allocates more energy into its root system than northern red or black oak. As discussed previously this does appear to be true for first-year seedlings (Farmer 1980). Marks (1975) has also shown that early successional species such as trembling aspen (*Populus tremuloides*) and pin cherry (*Prunus pennsylvanica*) have a mean root to shoot ratio of 0.18 while climax species

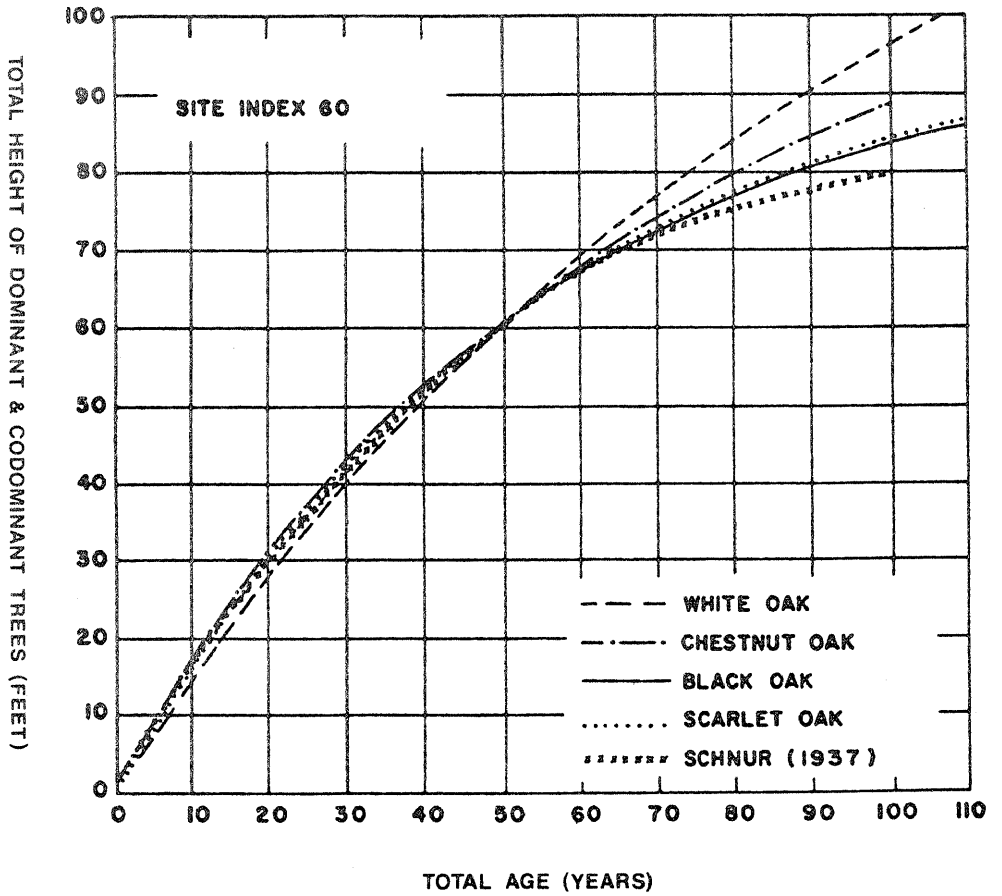

Figure 4. Tree height-growth patterns for four species of upland oaks including the Schnur (1937) site-index curve for upland oaks (from Carmean, 1971).

such as sugar maple and American beech have a ratio of 0.37. Interestingly, white oak has a ratio of 0.35 (McLaughlin et al., 1980). The evidence suggests white oak does maintain a better balance between shoots and roots than northern red oak but this has not been sufficiently documented.

SUMMARY

Characteristics listed by Fowells (1965) which enable white oak to become a dominant species over much of its range are related to a variety of physiological conditions and characteristics. The ability of white oak to (1) live vigorously for long periods as an overtopped tree and (2) persist during drought years or on droughty sites may be related to several physiological processes. These include:

(1) Low dark respiration rates under stress conditions (1-2 mg CO_2 dm^{-2} hr^{-1}).
(2) Low light saturation point for the photosynthetic systems (~ 500-700 μmoles m^{-2} s^{-1}).
(3) Thermal acclimation of the photosynthetic process.
(4) A low threshold water potential for stomatal closure.
(5) A high root to shoot ratio, and
(6) A deep and extensive root system which is capable of
    (a) growth under low soil moisture, and
    (b) penetration into soils of high clay content.

The ability of white oak to respond quickly to release and to exhibit moderate to fast growth rates in full sunlight may be related to the following factors:

(1) A moderate to high net photosynthesis potential.
(2) A stable photosynthetic system which retains a high potential for CO_2 uptake between full leaf expansion and leaf senescence.
(3) An ability to continue photosynthesis under stress conditions due to:
    (a) thermal acclimation of the photosynthetic system,
    (b) low threshold water potentials for stomatal closure, and
    (c) the ability to extract water from the soil,
(4) A relatively long duration of leaf area due to
    (a) the rapid rate of leaf expansion and
    (b) the resistance of leaves to premature abscission as a result of heat or water stress damage,
(5) A leaf area distribution which allows a large percentage of the total leaf mass to be exposed to incoming radiation, and
(6) The development of an extensive root system which permits the maintenance of a favorable internal water status.

No direct information has been gained from the work at Missouri to suggest reasons for white oak's great longevity. However, white oak does allocate a large portion of current energy to root growth; an attribute characteristic of intermediate and climax species (Marks, 1975). In conclusion, the carbon exchange properties, the growth characteristics and the drought resistance capabilities of white oak do appear to be well suited for sustaining growth over a range of sites, soils and exposures.

LITERATURE CITED

Akhtar, M.A., G.L. Rolfe and L.E. Arnold. 1976. Nutrient cycling in oak-hickory forests. 1. Precipitation, throughfall and stemflow. In Proceedings of First Central Hardwood Forest Conference (J.S. Fralish, G.T. Weaver and R.C. Schlesinger, eds), pp. 347-361. Southern Illinois University, Carbondale.

Aubuchon, R.R., D.R. Thompson and T.M. Hinckley. 1978. Environmental influences on photosynthesis within the crown of a white oak. Oecol. 35:295-306.

Bacone, J., F.A. Bazzaz and W.R. Boggess. 1976. Correlated photosynthetic response and habitat factors of two successional tree species. Oecol. 23:63-74.

Bazzaz, F.A., V. Paase, and W.R. Boggess. 1972. Photosynthetic and Respiratory rates of Sassafras albidum. Forest Sci. 18:218-222.

Bell, D.T. and F.L. Johnson. 1975. Phenological patterns in trees of the streamside forest. Bull. of the Torrey Bot. Club 102:187-193.

Blackman, B.G. and C.W. Ralston. 1968. Dry weight of several piedmont hardwoods. J. For. 66:418-420.

Boggess, W.R. 1956. Weekly diameter growth of shortleaf pine and white oak as related to soil moisture. Proceedings of the Society of American Foresters: 83-89.

Borchert, R. 1975. Endogenous shoot growth rhythms and indeterminate shoot growth in oak. Physiol. Plant. 35:152-157.

Carmean, W.H. 1971. Site index curves for black, white, scarlet and chestnut oaks in the central states. U.S.D.A., Forest Services Res. Paper NC-62. 8 pp.

Chabot, B.F. and A.R. Lewis. 1976. Thermal acclimation of photosynthesis in northern red oak. Photosynthetica 10:130-135.

Chaney, W.R. 1979. Leaf and twig abscission relationships in a mature white oak. Can. J. For. Res. 9:345-348.

Coe, J.M. and S.B. McLaughlin. 1980. Winter season corticular photosynthesis in Cornus florida, Acer rubrum, Quercus alba, and Liriodendron tulipefera. Forest Science (in press).

Dickmann, D.I. 1971. Photosynthesis and respiration by developing leaves of cottonwood (Populus deltoides bartr.). Bot. Gaz. 132:253-259.

Dinger, B.E. 1971. Comparative photosynthetic efficiency of four deciduous forest species in relation to canopy environment. Eastern Deciduous Forest Biome Memo Report 72-151. 16 pp.

Dougherty, P.M. 1977. Net carbon exchange characteristics of a dominant white oak tree (Quercus alba L.). Unpublished Ph.D. Diss, Univ. Missouri, Columbia. 222 p. Dis. Abstr. Int. B. 38:3487.

Dougherty, P.M., R.O. Teskey, J.E. Phelps and T.M. Hinckley. 1979. Net photosynthesis and early growth trends of a dominant white oak (Quercus alba L.). Plant Physiol. 64:930-935.

Dougherty, P.M. and T.M. Hinckley. 1980. The influence of a severe drought on net photosynthesis of white oak (Quercus alba L.). Can. J. Bot, (in press).

Farmer, R.E. Jr. 1980. Comparative analysis of 1st-year growth in six deciduous tree species. Can. J. For. Res. 10:35-41.

Fowells, H.A. 1965. Silvics of forest trees of the United States. Agriculture Handbook No. 271. U.S.D.A. Forest Service. Washington, D.C. 20750. 762 pp.

Fralish, J.S. 1976. Forest site-community relationships in the Shawnee Hills Region, southern Illinois. In Proceedings of First Central Hardwood Forest Conference (J.S. Fralish, G.T. Weaver and R.C. Schlesinger, eds.), pp. 65-87. Southern Illinois University, Carbondale.

Fralish, J.S., S.M. Jones, R.K. O'Dell and J.L. Chambers. 1978. The effect of soil moisture on site productivity and forest composition in the Shawnee Hills of southern Illinois. In: Proceedings of Soil Site Productivity Symposium (W.E. Balmer, ed.), pp. 263-285. U.S.D.A. Forest Service.

Geis, J.E., R.L. Tortorelli and W.R. Boggess. 1971. Carbon dioxide assimilation of hardwood seedling in relation to community dynamics in central Illinois. Oecol. 7:279-289.

Graney, D.L. 1977. Site index predictions for red oak and white oak in the Boston Mountains of Arkansas. U.S.D.A. Forest Service Research Paper SO-139.

Graney, D.L. and D.R. Bower. 1971. Site index curves for red and white oaks in the Boston Mountains of Arkansas. U.S.D.A. Forest Service Res. Note SO-121.

Hinckley, T.M., D.R. Thompson, M.P. McGinness, and A.R. Hinckley. 1976. Stem growth and phenology of a dominant white oak. In: Proceedings of First Central Hardwood Forest Conference (J.S. Fralish, G.T. Weaver, R.C. Schlesinger, eds.). pp. 187-202. Southern Illinois Univ., Carbondale.

Hinckley, T.M., R.G. Aslin, R.R. Aubuchon, C.L. Metcalf and J.E. Roberts. 1978. Leaf conductance and photosynthesis in four species of the oak-hickory forest type. Forest Sci. 24:73-84.

Hinckley, T.M., P.M. Dougherty, J.P. Lassoie, J.E. Roberts and R.O. Teskey. 1979. A severe drought: Impact on tree growth, phenology, net photosynthetic rate and water relations. Amer. Midl. Nat 102:307-316.

Hinckley, T.M., F. Duhme, H. Richter and R.O. Teskey. 1980. Temperate hardwood forest. In Water Deficits and Plant Growth (T.T. Kozlowski, ed.). Academic Press, London and New York (in press).

Jackson, L.W.R. 1967. Relation of leaf structure to shade tolerance of dicotyledonous tree species. Forest Sci. 13:321-323.

Johnson, F.L. and D.T. Bell. 1976. Plant biomass and net primary production along a flood frequency gradient in the streamside forest. Castanea 41:156-165.

Johnson, P.S. 1979. Shoot elongation of black oak and white oak sprouts. Can. J. For. Res. 9:489-494.

Lassoie, J.P. and J.L. Chambers. 1976. The effects of an extreme drought on tree water status and net assimilation rates of northern red oak under greenhouse conditions. In Proceedings of First Central Hardwood Forest Conference (J. Fralish, G.T. Weaver and R.C. Schlesinger, eds). pp. 269-283. Southern Illinois Univ., Carbondale.

Luxmoore, R.J., D.D. Huff, R.K. McConathy and D.E. Dinger. 1978. Some measured and simulated plant water relations of yellow-poplar. Forest Sci. 24:327-341.

Monk, C.D., G.I. Child, S.A. Nicholson. 1970. Biomass and leaf surface area estimates of an oak hickory forest. Oikos 21:138-141.

Marks, P.L. 1975. On the relation between extension growth and successional status of deciduous trees of the northeastern United States. Bull. of the Torrey Bot. Club 102:172-177.

McGee, C.E. 1976. Differences in bud break between shade-grown and open-grown oak seedlings. Forest Sci. 22: 484-486.

McLaughlin, S.B., R.K. McConathy and B. Beste. 1979. Seasonal changes in within-canopy allocation of ^{14}C-photosynthate by white oak. Forest Sci. 23:361-370.

McLaughlin, S.B., R.K. McConathy, R.L. Barnes and N.T. Edwards. 1980. Seasonal changes in energy allocation by white oak (Quercus alba L.) Can. J. For. Res. (in press).

Parker, J. 1978. Seasonal variation in photosynthesis in black oak twigs. Photosynthetica 12:423-427.

Parker, J. 1979. Effects of defoliation and root height above a water table on some red oak root metabolites. J. Amer. Soc. Hort. Sci. 104:417-421.

Parker, W.C. 1980. Seasonal changes in several water relations parameters of white oak, northern red oak and mockernut hickory. Unpublished M.S. Thesis, University of Missouri-Columbia. 122 p.

Phelps, J.E., J.L. Chambers and T.M. Hinckley. 1976. Some morphological, ecological and physiological traits of forest species. In 1st Central Hardwood Forest Conference (J.S. Fralish, G.T. Weaver and R.C. Schlesinger eds.). pp. 231-243. Southern Illinois Univ., Carbondale.

Rogers, R.R. 1975. Investigation of gross white oak leaf morphology in relation to crown position. Trans. Mo. Acad. Sci. 9:187.

Seidel, K.W. 1972. Drought resistance and internal water balance of oak seedlings. Forest Sci. 18:34-40.

Settergren, C.D., W.F. Hanson and R.M. Nugent. 1976. Streamflow and nutrient flux relationships in the Missouri Ozarks. In Proceedings of First Central Hardwood Forest Conference (J.S. Fralish, G.T. Weaver and R.C. Schlesinger, eds.), pp. 335-345. Southern Illinois University, Carbondale.

Sharpe, W.M. and H.S. Chisman. 1961. Flowering and fruiting in white oak. 1. Staminate flowering through pollen dispersal. Ecology 42:365-372.

Stout, B.F. 1968. Root systems of deciduous trees. American Nurseryman 127(13):120-122.

Taylor, R.J. and R.W. Pearcy. 1976. Seasonal patterns of CO_2 exchange characteristics of understory plants from a deciduous forest. Can. J. Bot. 54:1094-1103.

Teskey, R.O. and T.M. Hinckley. 1977. Impact of water level changes on woody riparian and wetland communities. Vol. 1 Plant and Soil responses. FWS/OBS-77/58.

Teskey, T.O., J.L. Chambers, G.S. Cox, T.M. Hinckley, and J.E. Roberts. 1978. A severe drought: 1. Soil-site relationships in an oak-hickory forest. In Soil Site Productivity Symposium Proceedings (W.E. Balmer Ed). pp. 316-326. U.S.D.A. Forest Service.

Teskey, R.O. and T.M. Hinckley. 1980. Root growth characteristics of white oak (Quercus alba L.). Physiol. Plant (in press).

Thompson, D.R. and T.M. Hinckley. 1977. Effect of vertical and temporal variations in stand microclimate and soil moisture on water status of several species in an oak-hickory forest. Amer. Midl. Nat. 97:373-380.

Turner, N.C. and G.H. Heichel. 1977. Stomatal development and seasonal changes in diffusive resistance of primary and regrowth foliage of red oak (Quercus rubra L.) and red maple (Acer rubrum L). New Phytol. 78:71-81.

Tryon, E.H. and R.P. True. 1968. Radial increment response of Appalachian hardwood species to a spring freeze. J.For. 66:488-491.

Wistendahl, W.D. 1975. Buffalo Beats, a relict prairie within a southeastern forest. Bull. of Torrey Bot. Club 102:178-186.

ACKNOWLEDGEMENTS

[1] Dougherty, Hinckley and Cox were respectively, graduate student and Associate Professor, and Professor in the school of Foresty, Fisheries and Wildlife, University of Missouri, Columbia, MO 65211. This work summarizes the efforts of the following people: Ray Aslin, Rich Aubuchon, Dave Bruckerhoff, Jim Burroughs, Jim Chambers, Arline Hinckley, Brian Kelly, Jim Lassoie, Neil McGinness, Cliff Metcalf, John Phelps, Dan Thompson, Alice Walters, and William Parker. Dev Joslin provided the ideas for the model that is presented in this paper.